WTCI-133-P

# TENANT CONSTRUCTION REVIEW UNIT

# TENANT CONSTRUCTION REVIEW MANUAL

MARCH 1984

Engineering Department

THE PORT AUTHORITY OF NY & NJ

20

Varouj

- - BUCKSLIP - -

THE PORT AUTHORITY OF N Y & N J.
ENGINEERING DEPT., QUALITY ASSURANCE DIV
TENANT CONSTRUCTION REVIEW UNIT

AUG 29 1989

RECEIVED

NOTED: _____

REFERRED TO: _____

TO: Herbert Somerwitz
FROM: Anthony G. Cracchiolo
DATE: August 26, 1987
SUBJECT: POLICY ON THE USE OF PVC INSULATED WIRING AND CONDUITS
REFERENCE: Memorandum, R.M. Monti to J. Vanacore, dated 7/23/87
COPY TO: J. Ansley, A. Coras, D. Hahn, J. Harrington, T. Kelly, R. Loureiro, F. Schink, P. Wood, A. Wylen, File

As discussed, the referenced memorandum establishing a policy on the subject material is not intended to prohibit the use of these materials in "all construction on Port Authority property" as can be implied from the first paragraph, but only "within buildings" as per the first sentence of the third paragraph. The use of PVC conduits for exterior installation was not intended to be prohibited by the subject policy.

Please disseminate this information to all concerned within the Law Department.

Anthony G. Cracchiolo, P.E.
Engineer of Design
Aviation

THE PORT AUTHORITY OF NEW YORK AND NEW JERSEY

MEMORANDUM

To: Joseph L. Vanacore, Asst. Executive Director/Capital Programs
From: R.M. Monti
Date: July 23, 1987
Subject: POLICY ON THE USE OF PVC INSULATED WIRING AND CONDUITS

Copy: R. Aaronson, A. Barber, P. Falvey, S. Frigand, L. Gambaccini, C. Hirsch, R. Kelly, J. Kirk, P. LaRocco K. MacKay, H. O'Neill, D. Plavin, V. Strom

In attempting to maintain the highest possible level of safety and integrity, the Engineering Department has prohibited the use of PVC insulated wiring and conduits, within buildings, for Port Authority designed and constructed projects for over 20 years. I recommend that this policy include all construction on Port Authority property and construction financed in whole or part by the Port Authority.

The primary concern with these products has been their physical limitations at extreme temperature and under pressure. At low temperature exposures, below 32 degrees F, PVC becomes brittle, while when exposed to high temperatures, over 104 degrees F, it is subject to deformation. PVC is also subject to deformation due to pressure during typical installation procedures at normal temperatures. Because of the loss of these physical properties, the insulation of the conductor may be damaged when installed in conduit. As a result, the conductor may be subject to premature electrical faults, which can cause electrical system malfunctions, interruption of service and ultimately loss of system reliability.

Given these physical disadvantages and in view of the fact that alternate products are readily available, PVC insulated wiring and conduits are not to be used within buildings in Port Authority and Tenant construction installations. The economic impact of this policy may be approximately 5% increase in the cost of the electrical wiring material. When evaluated on a total project basis, the cost is not significant compared with the potential benefits derived.

If it is determined that conformance to this policy is not possible, exceptions may be considered. Such exceptions shall be permitted only if the Line Department Director, who proposes such a course of action, obtains the approval of the Chief Engineer, General Counsel, and the Assistant Executive Director/Capital Programs.

RECOMMENDED: _____
R.M. Monti, Director of Engineering & Chief Engineer

CONCURRED: _____
J.L. Vanacore, Asst. Executive Director/Capital Programs

APPROVED: _____
S. Berger, Executive Director

THE PORT AUTHORITY OF NEW YORK & NEW JERSEY

M E M O R A N D U M

To: Julian Kau, General Manager,
Planning Design & Construction, WT&ED
From: Ennala Ramabhushanam
Date: April 4, 1991
Subject: **PEER REVIEW - TENANT ALTERATIONS - TAIPEI BANK - WORLD TRADE CENTER - ALTERATION APPLICATION W-4607**

Reference: Memorandum Gaeta/Cooper, dated April 2, 1991

Copy To: P. Cooper, V. Dovletian, E. Fasullo, G. Gaeta, L. Menno, G. Wenger

The proposal as outlined in the referenced memorandum, to retain peer reviewing consultants for Taipei Bank's future alterations in the World Trade Center, has been reviewed.

The proposal is approved and is based on the consulting firms' relevant experience and adequate staffing, as well as the following:

- The peer review consulting firms and their personnel shall be completely independent of the designing and contracting firms, and shall have had no previous involvement in the design intended for review.

- The actual peer review will be conducted by the following consultants and their respective staff members:

<u>Highland Associates</u>

- Dominic Provini, R.A. (NY), Partner/Director of Architecture - architectural review.

- Jeffrey A. Pencek, R.A. (PA) Director of Operations, NY - architectural review.

- J. Thomas Ward - architectural review.

- Michael Dench, Director of Operations - architectural review.

- o Laurence J. Colavito, P.E. (NY), Director of Mechanical Engineering - mechanical and fire protection review.
- o M. Bilal Hasan, - mechanical reviewer.
- o Gil Ben-Ami, P.E. (NY), Partner - electrical review.
- o Herminio Z. Calderon, Electrical Project Engineer - electrical review.

Leslie E. Robertson Associates

- o William J. Faschan, P.E. (NY), Partner - structural review.

Ennala Ramabhushanam, P.E.
Manager
Quality Assurance Division

PSC/dm
att.

# M E M O R A N D U M

To: S. Brezenoff, Executive Director
From: D. Plavin, Director of Aviation
Date: March 13, 1991
Subject: **APPROVAL OF VARIANCE - JAPAN AIRLINES RACK-STORAGE FACILITY AT JOHN F. KENNEDY INTERNATIONAL AIRPORT**

The Board, at its September 1989 meeting, authorized the Port Authority to enter into a lease agreement with Japan Airlines Management Corporation (JMC) for the renovation and development of the Building 14 site, including the construction of a fully automated and computerized cargo-handling facility. It is anticipated that the lease agreement will be executed shortly.

The JMC proposal for the cargo facility involves the construction of a rack-storage structure as an addition to Building 14, where the storage system also serves as the building's structural system. The New York City Building Code, which was last revised in 1968, did not anticipate the major technological advancement which is reflected in JAL's proposed design. In contrast, many nationally recognized building codes, such as BOCA, which are revised more frequently, provide requirements for such storage systems. The New York City Building Code conventional categorization of the proposed design as a storage structure, results in requiring that a) the supporting structure be fire-proofed or, b) that the exterior walls be fire-divisions and integral with an independent and fire-proofed supporting structural system. The rack-storage system within the walls then is considered as installed equipment, not requiring fire-proofing.

Compliance with a) above would be impracticable since fire-proofing the rack's structure would mechanically interfere with the operation of the system. Compliance with b) above, which provides for an independent structure, would substantially increase the building's footprint on this limited site. Such an increase would be unacceptable since the Rack-storage Facility is sited between the aeronautical ramp, the existing hangar and the truck docks. The depths of the aeronautical ramp and the truck docks are already at functional minimums, and the height of the facility is already set at the maximum allowable under the Runway 13R side slope restrictions. Consequently, only by significantly reducing the rack-storage capacity could an independent structure be accommodated within the volume available on the site for this facility.

Unfortunately, the capacity of the Rack-storage Facility is barely at adequate minimums based on the projected aircraft activity and Japan Airlines projected cargo demand. Therefore, the option of sacrificing a portion of the rack-storage to accommodate an additional structural system is unacceptable. In addition, the added cost of an independent structure, coupled with the reduction of capacity, would render the project economically unviable.

11/09/90

# JFIA - ALTERATION APPLICATION Y-6184
# HANGAR 14 - JAPAN AIRLINES - HIGH RISE RACK STORAGE - FIRE PROTECTION - VARIANCE FROM NEW YORK CITY BUILDING CODE

## SUMMARY

1. Japan Airlines (JAL) proposes to build a high rise automated rack storage building rising from a concrete platform 32 ft. above grade to a total height of 110 ft., with 36,000 sq. ft. foot print, (90′ x 400′), as part of the existing hangar 14 alteration at Kennedy Airport. The New York City Building Code requires a moderate hazard storage building of this size to be sprinklered and have a nominal 3-hour fire rating, achieved through fire proofing of the structural components. JAL proposes not to fire proof the structure but protect it by means of sprinklers.

## CODES

2. The New York City Building Code does not address completely mechanized automated storage buildings specifically. Consequently the design of such buildings will be based on the requirements for storage buildings in general, resulting in fire proofed structure. In this case the building must be 3-hour rated and be sprinklered.

3. At the present there are several automated rack storage facilities at the Kennedy Airport. They are all under 50(±) feet in height and, as in most of them the structure is independent of the racks, its components do not carry moving objects and are fire proofed. The racks are designed to be structurally adequate for the anticipated loads consisting of containers and open bins. These containers and bins are stored and retracted by means of ETV's (elevating transfer vehicles), running on tracks, and normally operated by a person. These buildings are designed to meet the New York City Building Code and be sprinklered, overhead and within the racks according to the NFPA (National Fire protection Association) Standard 231C, Rack Storage of Materials. NFPA is a private organization involved in fire protection research and promulgation of standards. These standards are widely used in the country and many of them are adopted by various Building Codes. 231C is not a standard adopted by the New York City Code, but it is developed specifically for rack storage facilities. These increased fire protection needs of such facilities are not addressed by the New York City Code.

4. BOCA, the building code adopted by several eastern states including New Jersey, has requirements for storage buildings in general similar to the New York City Code. However, it specifically exempts rack storage facilities from the general area and height controls when these facilities

   a. are one-story
   b. are noncombustible

c. do not have access by the public
d. the contents are not high hazard
e. have appropriate exit facilities
f. are isolated (guidelines given in the Code).
g. conform to the requirements of NFPA Standard 231C, Rack Storage of Materials.

TENANT'S PROPOSAL

5. JAL Consultants

| | |
|---|---|
| Architect: | Hellmuth, Obata & Kassabaum, P.C.<br>641 Sixth Avenue<br>New York , N.Y. 10011 |
| Fire Protection: | Rolf Jensen & Associates, Inc.<br>211 Mountain Avenue<br>Springfield, N.J. 07081 |

observe that the New York City Code is not specific for this project and request that they be permitted to use the BOCA approach, satisfying the conditions of Section 4 above as follows:

a. The steel structure is considered as a one-story building.

b. The structure will be noncombustible-steel frame with sheet metal skin, over reinforced concrete.

c. It will be unoccupied - completely automated.

d. The contents will be considered to be ordinary hazard combustibles, Class IV as per NFPA 231C.

e. Egress - not yet analyzed.

f. The rack storage structure will be separated from the remainder of the facility by a 3-hour vertical wall.

g. It will be sprinklered as per NFPA 231C for class IV commodities, on a pre-action system, connected to smoke detectors, with the appropriate maintenance program.

PRECEDENTS

6. A partial list of rack structures is submitted by the consultants, consisting of:

| | | |
|---|---|---|
| USA | 56′ to 72′ in height, | 10 |
| | 75′ - 95′ | 10 |
| | 100′ - 110′ | 3 |
| Canada | 80′ - 116′ | 4 |
| W. Germany | 80′ | 1 |

The consultants' report does not give information on the type of fire protection in these buildings, and is not clear if the racks constitute the structure of the building.

Also, the attached photographs show that these buildings are mostly isolated.

COMMENTS

7. a. Assurance should be established that the commodities stored on the building shall not exceed ordinary hazard (NFPA Class IV) combustibility.

   b. Appropriate egress should be designed for workers or maintenance personnel that may enter the facility.

   c. Isolation of the non-fire proofed structure as proposed is not adequate to satisfy Code requirements for fire rating the exterior walls of a building depending on its proximity to other buildings. In this case a 2-hour wall is required for a building designed conventionally as per New York City Code. 3-hour per BOCA even for rack storage structures exempted from the general requirements.

      This subject was brought up by the members of the Quality Assurance Division in a meeting with the Facility Management and JAL consultants, on October 30, 1990, especially in view of the adjoining hangar's suspended roof system with above-roof exposed cables, and must be resolved.

   d. A detailed analysis shall be submitted to establish the protection of the structural components, defining locations, activation, quantities and pressures of detectors and sprinklers.

   e. As the Facility depends on the New York City Fire Department for fighting fires, and especially in view of the height of this building, assurance must be established that the Fire Department will find the proposed design acceptable.

RECOMMENDATION

8. Subject to the resolution of the comments listed in Section 7 above the proposed design may, in principal, be considered to have met the intent of the New York City Building Code, as also stated by the consultants.

Varouj Dovletian

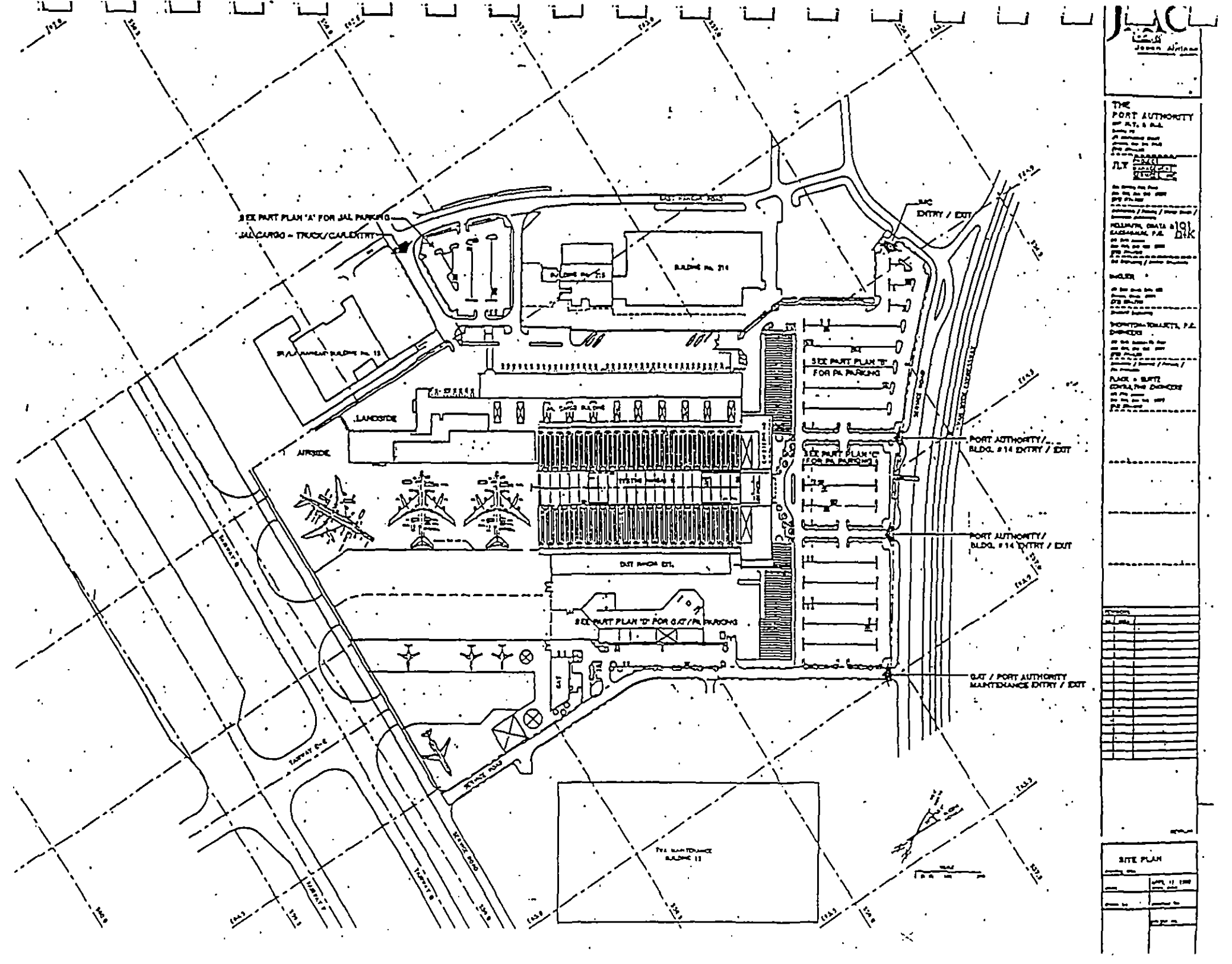

SEE PART PLAN 'A' FOR JAL PARKING
JAL CARGO - TRUCK/CAR ENTRY
BUILDING No. 214
BUILDING No. 215
SR/LA MANGAS BUILDING No. 13
LANDSIDE
AIRSIDE
JAL CARGO BUILDING
SEE PART PLAN 'B' FOR PA PARKING
SEE PART PLAN 'C' FOR PA PARKING
SEE PART PLAN 'D' FOR GAT/PA PARKING
GAT
JAC ENTRY / EXIT
PORT AUTHORITY/ BLDG. #14 ENTRY / EXIT
PORT AUTHORITY/ BLDG. #14 ENTRY / EXIT
GAT / PORT AUTHORITY MAINTENANCE ENTRY / EXIT
TAXIWAY B
TAXIWAY C-E
TAXIWAY F
SERVICE ROAD
TWA MAINTENANCE BUILDING 13
THE PORT AUTHORITY
SITE PLAN

# AIRPORT UNDERGROUND FUEL SYSTEMS - LOCATION AND DESIGN

The use and operation of the underground fuel distribution system at International Airport and the current necessity for modification of some system components and to structures which coexist with system components, reveals that two aspects of design and use are of critical importance. Those two are:

1. Safety considerations which are in conflict with proposed underground fuel system component design and location and;

2. Operational need for the use of the fuel facilities without either long or short term shut-down.

It should be noted here that there are no state or municipal laws which provide guidance or establish requirements affecting these considerations. Standards adopted by other agencies, although useful as reference, do not seem appropriate in scope or detail to be acceptable as requirements.

It appears that all design and operational considerations in this matter pertain to two general equipment categories which should be considered separately, and are not interdependent. These are:

1. Transmission lines (those which carry bulk fuel supplies under or across a given area, and the operation of which do not concern the area so traversed);

2. Local lines (those which carry fuel to the single area in question and which having once entered the area do not leave it).

The considerations which affect design criteria for underground fuel lines of either of the two major equipment categories described above can be reasonably divided into three separate issues which, listed in their descending order of importance are:

1. Safety of the public, employees, structures and contents, and aircraft and its associated equipment;

2. Constancy of fuel service whether to local or non-localized areas and;

3. Periods of non-service which result from incidents requiring leak detection or discovery, shut-off time, the reestablishment of safe interim conditions and system repair.

**********

With the above in mind the following concepts have been adopted for underground fuel systems and their components, which coexist with airport structures and aircraft located there at:

Transmission Lines

Should be remote from buildings and gate positions (minimum 100 feet).

Should not be under building floors regardless of other considerations.

Should preferably not be located under areas of heavy traffic.

Should not be overlaid by heavy pavement.

Should not promote service interruptions through accident or tampering.

Should maximize continuity of use during extension or modification.

Local Lines

Should minimize exposure of the public, employees, structures and contents, and the aircraft and its associated equipment.

Should not permit leaks to result in the introduction of fuel to any building area.

Should not permit leaks, repairs or alterations to the system to affect the means of egress from a structure.

Should in no way permit the repair of system components to affect or add to the existing hazard.

Should make practical the discovery of leaks and making of repairs without major demolition of buildings or their components, apron structures, etc., or the disruption of other utilities or service.

Should facilitate additions to buildings adjacent without serious interruption to fueling service or building use.

**********

Design Criteria

A. General - Underground fuel pipes, whether transmission lines or local lines will not be permitted under floors, in blind spaces, or utility tunnels of enclosed occupied buildings. Pavement, other services, and utilities coexisting with fuel lines should be considered at the time of design with reference to the hazard presented by leakage of these lines and the necessity for leak detection, shut-down and repair, and the practicality of accomplishing a quick return of service with minimum delay and without material increase in hazard. It must be practical to add new building construction or to modify or relocate pipe lines.

B. Transmission Lines - Should be located a minimum of 100 feet from every occupied building and if possible from aircraft gate positions.

The run of transmission lines transversely under fingers is permitted but only if enclosed in a reinforced concrete envelope which encases the pipe bank under the floor and for a distance of 100' outside of the finger walls.

C. Local Lines - May be located beneath an overhang of an occupied building provided that the overhang is no more than 50 feet and provides an

open-air exposure. In this circumstance, structural building elements facing the pipeline location, including the second floor slab and the first floor exterior wall and the protectives for openings must have a 1½ hour fire rating, and the ceiling height must be no less than 12 feet above the ground floor. Such overhang areas shall not have solid obstruction to open-ness exceeding 10% of the aggregate vertical plane area of the basic open face nor shall a maximum linear obstructive dimension exceed 40 feet. Openings in the walls facing such ground floor areas shall be equipped with automatic fire shutters and doors. An automatic foam sprinkler system shall be provided throughout the overhang area.

The run of local fuel lines transversely under fingers is permitted but the run shall not exceed 50 feet, and area above the pipes shall simulate a tunnel, the width of which will be determined by allowing five feet clear on each side of the pipe bank, and the opening at each end of the tunnel shall equal such dimension. Walls and ceilings shall have 1½ hour fire rating. Wall openings shall be protected by 1½ hour automatic shutters and doors.

Alternate design of protective construction may be approved for the run of fuel lines under fingers if judged by the Authority to afford equivalent safety.

Underground fuel lines when otherwise permitted within 10 feet of below grade areas (basements, etc.) will require that the walls and floor of the subgrade structure be liquid and vapor proof with respect to petroleum products.

Local fuel lines carrying fuels with flash points below 100°F will follow the criteria of transmission lines.

Surge suppressors may be located inside of an outer building face if surrounded with walls and ceiling of 1½ hour fire rating and an open air face which has an equivalent of 2/3's open.

Emergency alarm and shut-down stations shall be set on wall on column faces which are in the open air.

THE PORT AUTHORITY OF NEW YORK & NEW JERSEY

M E M O R A N D U M

To: W. Biancamano, R. Catlin, P. Ciano, E. Chalom, G. Doherty, E.K. Farrely, W. Fife, P. Galya, R. Goode, G. Jensen, J. Kau, J. Miller, M. Ronis, S. Smolenski, E. Takla, V. Volpicelli
From: Ennala Ramabhushanam
Date: September 12, 1990
Subject: **CRITERIA FOR REVIEWING TENANT ALTERATION APPLICATIONS**

Copy To: P. Cooper, V. Dovletian, E. Fasullo, E. Ramabhushanam, TCRU Staff

PAI 40-2.02, "Tenant Construction or Alteration Applications," has been revised and will become effective in the not too distant future. One of its revisions is the new schedule of review times which indicates significantly reduced review periods for "subsequent submissions." (see attachment). In order to accommodate the shortened review periods, your cooperation will be required in regard to the criteria for reviewing such tenant work. The criteria are listed below. Please note that these criteria were developed by the "TCRU Subcommittee," which had been established early in 1988. Its members, who represented five Line Departments and the Engineering Department, unanimously agreed on the criteria's content. A partial copy of the Subcommittee's concluding memorandum is attached for your information.

Criteria

1. Should TCRU analysis find that the scope-of-work and/or complexity of a given submission significantly exceeds the "average" (for the work's cost category as noted in the new review period schedule), the amount of (necessary) additional review time will be discussed with the Line Department/Facility.

2. All submissions must be complete and unfragmented, containing all appropriate drawings, specifications, computations, and supporting documents, and be accompanied by a cover letter completely and accurately listing the submitted documents including titles and dates, and comprehensively describing the project's scope-of-work (to be reviewed.) Subsequent submissions which include scope-of-work changes will be treated as an initial submission.

All subsequent submissions must also contain a written response to TCRU review comments, identifying the TCRU review memo and the comments which are addressed. The responses should be numbered to match the TCRU comments.

Incompleteness in these areas will result in the submission being returned to the Line Department/Facility, with an explanatory memo noting the submission's omissions.

3. Requests for abbreviated review periods and/or expedited processing will require a Line Department/Facility meeting with TCRU prior to the documents' submission, in order to reach agreement on the review periods' length, and (if necessary) to establish which of the same Line Department/Facility's projects will have their reviews delayed.

4. Projects proposed for partial approvals will require conformance with PAI 45-1.07.1.

Please provide copies of this memorandum to all of your staff who are involved with the Tenant Alteration Application review process. If you have any questions, or require additional information, please direct your inquiries to Paul S. Cooper at (212) 432-5558.

Thank you for your collective cooperation.

Ennala Ramabhushanam, P.E.
Manager
Quality Assurance Division

PSC/dm
att.

THE PORT AUTHORITY OF NEW YORK & NEW JERSEY

M E M O R A N D U M

To: W. Biancamano, R. Catlin, P. Ciano, E. Chalom, G. Doherty, E.K. Farrely, W. Fife, P. Galya, R. Goode, G. Jensen, J. Kau, J. Miller, M. Ronis, S. Smolenski, E. Takla, V. Volpicelli
From: Paul S. Cooper
Date: September 6, 1990
Subject: **ACCESS TO ALTERATION APPLICATION REVIEW STATUS**

Copy To: V. Dovletian, E. Ramabhushanam, TCRU Staff

In order to increase the efficiency of the tenant review process, effective September 12, 1990 the Tenant Construction Review Unit (TCRU) of the Engineering Department's Quality Assurance Division will have established a "Shared Folder" in the Office Automation (OA) system. For other Port Authority units and facilities, this will provide direct access to preliminary Alteration Application status data **without telephone use**. The data for each Application will include the Application number, the Tenant (or project name), the date on which the Application review period begins, and the target date for the review's completion. This shared folder will replace the interim method currently being used for this process.

The data will be maintained under the OA account titled TCRU. The individual Application will be listed in the shared folder with a prefix letter(s) identifying the facility followed by the Application number. For example, an Application for tenant work at the World Trade Center will be titled W5103. A complete list of these prefix letters is attached.

To access data, follow the steps noted below:

1. Party requesting data signs on to the OA using normal procedures.
2. Press "select."
3. Type shared folder account name: [TCRU] **(ALL CAPS, SQUARE BRACKETS).**
4. Tab down.
5. Type Application number; eg. Y6719, W4938, EIP23, etc. **(USE NO HYPHENS OR SPACES)**
6. Press "enter."
7. Press "R" to read.
8. Press "P" to print.

Please distribute this memorandum to all of your staff who are involved in the Alteration Application and Tenant review process.

Should you require additional information, or have any questions regarding the above, please telephone Ms. D. Merrick at (212) 432-5556.

Paul S. Cooper
Supervisor
Design Standards/TCRU Unit

ATTACHMENT

| Facility | Prefix |
|---|---|
| John F. Kennedy International Airport | Y |
| LaGuardia Airport | G |
| Newark International Airport | N (Plus A,B,C, CC, etc.) |
| Teterboro Airport | TPAAC |
| World Trade Center | W (Plus X for mezzanine exhibits and egress studies.) |
| Teleport | TP |
| Newark Legal and Communications Center | L |
| Yonkers Industrial Park | YIP |
| Bathgate Industrial Park | BIP |
| Elizabeth Industrial Park | EIP |
| Port Authority Bus Terminal | PABT |
| George Washington Bridge Bus Terminal | GWBBT |
| Journal Square Transportation Center | JSTC |
| Port Authority Tech Center | PATC |
| Port Authority Trans-Hudson Corporation | R |
| Ports Department | (see note) |

**Note: The prefixes used for the Ports Department Applications will be as provided by that department; ie., PN, BP, LNS, OEP, etc.**

THE PORT AUTHORITY OF NY & NJ
QUALITY ASSURANCE DIV.
ENGINEERING DEPT.
JUL 26 1990
RECEIVED
NOTED:
REFERRED TO:

THE PORT AUTHORITY OF NEW YORK & NEW JERSEY

M E M O R A N D U M

To: Ennala Ramabhushanam
From: Robert E. Catlin
Date: July 20, 1990
Subj: REVISED TENANT CONSTRUCTION MANUAL - MARCH 1990

Ref: Memo dated July 5, 1990 - same subject

Copy: R. Cronin, L. Genovese, D. Hahn, J. Kau, P. Marchese

With respect to the subject manual, I do not find any indication that we had an opportunity to review its content.

In the very first sentence of the Section II, Introduction, there is language which conflicts with certain P.A. lease agreements with tenants at the Teleport. Those leases limit the tenants responsibilities to conforming with the ordinances, resolutions, and regulations of the City of New York in regard to the construction of buildings and structures, as if the Teleport were owned and leased to a private corporation.

Our review of the subject manual does not reveal reference to construction guidelines with respect to seismic ceilings.

Robert E. Catlin
General Manager
The Teleport

| COPY TO | |
|---|---|
| ER | |
| LL | |
| PC | ✓ |
| JC | |
| VAD | ✓ |
| | |
| PD | |
| BF | |
| JH | |
| IR | |
| | |
| AT | |
| MA | |
| | |
| RR | |
| FILE | ✓ |
| POST | |

THE PORT AUTHORITY OF NEW YORK & NEW JERSEY

M E M O R A N D U M

To: ALL STAFF ON ATTACHED DISTRIBUTION LIST
From: Ennala Ramabhushanam
Date: July 5, 1990
Subject: REVISED TENANT CONSTRUCTION MANUAL

Copy To: File

Enclosed for your use and/or information is the revised Tenant Construction Manual. This edition includes: code amendments; new requirements, abstracted from the New York City Laws, for filing fire protection plans of buildings (see Manual Section 3, Item 4); design requirements for earthquake forces; guidelines on the design of ceilings; requirements for differential settlements of foundations; and a new "environmental" section.

Ennala Ramabhushanam

Ennala Ramabhushanam, P.E.
Manager
Quality Assurance Division

PSC/dm
att.

THE PORT AUTHORITY OF N.Y. & N.J.
RECEIVED
JUL 5 1990
WORLD TRADE DEPARTMENT
THE TELEPORT

# B U C K S L I P

To: TCRU Staff
From: V. Dovletian
Date August 24, 1990
Subject: **FIRE PROTECTION PLANS**

Copy To: P. Cooper, E. Ramabhushanam

Architects: The following comment must be included in the architectural comments if the project falls in the categories of C26-124.1 for submission of Fire Protection Plans:

> "Please note that Fire Protection Plans must be submitted as required by the N.Y.C. Building Code Sections 27-228.1 (C26-124.1) et seq."

Coordinators: When approving a job for the first time, verify with our reviewing architect if Fire Protection Plans are required, and if they are, and not yet submitted, write the following comment in the Rider under "General" heading:

> "The requirement to submit the Fire Protection Plans as per N.Y.C. Building Code Sections 27-228.1 (C26-124.1) et seq. is outstanding."

Varouj

THE PORT AUTHORITY OF NEW YORK & NEW JERSEY

M E M O R A N D U M

| | |
|---|---|
| **TO:** | R. Catlin, G. Doherty, W. Fife, R. Goode, G. Jensen, R. Linn, J. Miller, M. Ronis, R. Sarles, S. Smolenski, E. Takla, V. Volpicelli, J. Zitelli |
| **FROM:** | Ennala Ramabhushanam |
| **DATE:** | May 18, 1989 |
| **SUBJECT:** | **TENANT REVIEWS - LANDSCAPING** |
| **COPY TO:** | I. Angelet, P. Cooper, J. Cosenza, R. Davidson, V. Dovletian, E. Fasullo, L. Lupinacci; TCRU/Design Standards Staff; File |

Effective immediately, TCRU/Design Standards will no longer review the landscape portion of any given tenant contract document submission, unless specifically requested, in writing, to do so by the Line Department/Facility.

Please inform your respective staff of this TCRU/Design Standard's procedural change.

Ennala Ramabhushanam, P.E.
Manager
Quality Assurance Division

PSC/rr

# DESIGN CRITERIA FOR PANY/NJ TENANT ALTERATIONS

- The codes and standards listed in the Tenant Construction Review Manual.

- Design Standards for Plaster Ceilings (Copy Attached).

- Design for seismic Zone 2 forces, using the provisions of BOCA 1990 Building Code.

THE PORT AUTHORITY OF NEW YORK & NEW JERSEY

M E M O R A N D U M

| | |
|---|---|
| **TO:** | R. Catlin, R. DiChiara, G. Doherty, W. Fife, P. Galya, R. Goode, G. Jensen, R. Linn, J. Miller, M. Ronis, R. Sarles, S. Smolenski, E. Takla, V. Volpicelli; File |
| **FROM:** | Ennala Ramabhushanam |
| **DATE:** | June 28, 1989 |
| **SUBJECT:** | **BUILDINGS - DIFFERENTIAL SETTLEMENT** |
| **COPY TO:** | A. Aronowitz, P. Cooper, V. Dovletian, E. Fasullo, O. Suros, D. York, File |

Due to the geotechnical conditions, and to minimize the construction cost, certain new tenant buildings are designed for future settlement and re-leveling of the superstructure when settlement does occur. Accordingly, settlement monitoring and procedures for future leveling of the building should be specified by the tenant's consultant.

In all these instances the Tenant/Port Authority agreement must contain language establishing the Tenants' responsibility for having his Consultant-of-Record develop a settlement monitoring program and procedures for releveling the building, and having it submitted along with all other pertinent documents for review and approval to the Tenant Construction Review Unit of the Engineering Department's Quality Assurance Division. The Tenant's responsibility for monitoring and re-leveling should be specified in the agreement.

For existing buildings which have already been designed with the expectation of post-construction settlement, the Line Departments/Facilities will be responsible for amending their respective Port Authority/Tenant leases, or executing an additional lease agreement, to require that the Tenant provide a monitoring program meeting the same requirements described above.

Ennala Ramabhushanam

Ennala Ramabhushanam, P.E.
Manager
Quality Assurance Division

PSC/rr

THE PORT AUTHORITY OF NEW YORK & NEW JERSEY

M E M O R A N D U M

To: R. Catlin, R. DiChiara, G. Doherty, W. Fife, P. Galya, R. Goode, G. Jensen, A. Vaccaro, J. Miller, M. Ronis, R. Sarles, S. Smolenski, E. Takla, V. Volpicelli, File
From: Ennala Ramabhushanam
Date: August 15, 1989
Subject: BUILDINGS - DIFFERENTIAL SETTLEMENT

Reference: Memo from E. Ramabhushanam, dated June 28, 1989

Copy to: A. Aronowitz, P. Cooper, V. Dovletian, E. Fasullo, L. Lupinacci, O. Suros, A. Trivedi, D. York, File

The above referenced memorandum addresses the design of buildings, that are constructed with allowance for future settlement for reasons of economy or site specific geotechnical conditions. Though this type of construction is structurally acceptable, monitoring and adjustment are required for the operation and use of the building.

In order to develop a comprehensive program of monitoring the performance of these buildings and to institute a program of leveling, if required, the following data is necessary.

1. Identify buildings designed for future settlement at each facility.

2. Determine the present status of the settlement.

3. Identify any current or planned leveling programs and/or frequency of the settlement monitoring.

4. History of past levelings.

It is, therefore, requested that the above information and any other design recommendations for monitoring and anticipated settlement at the time of the design be sent to this division. Once the data is made available, a determination will be made of the acceptability of the program for each building. For existing Port Authority-owned buildings, the above process is

adequate. For existing tenant-owned buildings, the tenant shall be advised by your department to submit program of monitoring and leveling for evaluation.

If you have any questions or need further information, please call me or Arvind Trivedi of my staff.

Ennala Ramabhushanam

Ennala Ramabhushanam, P.E.
Manager
Quality Assurance Division

AT:jb

THE PORT AUTHORITY OF NEW YORK & NEW JERSEY

M E M O R A N D U M

TO: R. Catlin, R. DiChiara, G. Doherty, W. Fife, P. Galya, R. Goode, G. Jensen, R. Linn, J. Miller, M. Ronis, R. Sarles, S. Smolenski, E. Takla, V. Volpicelli; File
FROM: Ennala Ramabhushanam
DATE: June 28, 1989
SUBJECT: BUILDINGS - DIFFERENTIAL SETTLEMENT

COPY TO: A. Aronowitz, P. Cooper, V. Dovletian, E. Fasullo, O. Suros, D. York, File

Due to the geotechnical conditions, and to minimize the construction cost, certain new tenant buildings are designed for future settlement and re-leveling of the superstructure when settlement does occur. Accordingly, settlement monitoring and procedures for future leveling of the building should be specified by the tenant's consultant.

In all these instances the Tenant/Port Authority agreement must contain language establishing the Tenants' responsibility for having his Consultant-of-Record develop a settlement monitoring program and procedures for releveling the building, and having it submitted along with all other pertinent documents for review and approval to the Tenant Construction Review Unit of the Engineering Department's Quality Assurance Division. The Tenant's responsibility for monitoring and re-leveling should be specified in the agreement.

For existing buildings which have already been designed with the expectation of post-construction settlement, the Line Departments/Facilities will be responsible for amending their respective Port Authority/Tenant leases, or executing an additional lease agreement, to require that the Tenant provide a monitoring program meeting the same requirements described above.

Ennala Ramabhushanam

Ennala Ramabhushanam, P.E.
Manager
Quality Assurance Division

PSC/rr

THE PORT AUTHORITY OF NEW YORK & NEW JERSEY

M E M O R A N D U M

To: R. Catlin, G. Doherty, W. Fife, P. Galya, R. Goode, G. Jensen, J. Miller, M. Ronis, R. Sarles, S. Smolenski, E. Takla, A. Vaccaro, V. Volpicelli, J. Zitelli
From: Ennala Ramabhushanam
Date: August 1, 1989
Subject: ALTERATION APPLICATION REVIEWS RESULTING IN A WITHHOLD OF APPROVAL

Copy To: P. Cooper, V. Dovletian

In order to assist Port Authority tenants and their consultants in achieving the earliest possible construction start for their proposed projects, all future memoranda whose review comments have contributed to a withhold of approval will be notated with an asterisk (*).

Past practice will be maintained in that when the tenants submit revised contract documents, they will remain responsible for conforming to all review comments. Fragmented submissions merely addressing the asterisked comments will only serve to lengthen the review process for the given project, and will, in turn contribute to delaying the review of other projects. Also, when the subsequent submission has achieved an "approval to proceed... subject to...," the tenants will remain responsible for resubmitting their contract documents as necessary to receive an unqualified approval.

Ennala Ramabhushanam

Ennala Ramabhushanam, P.E.
Manager
Quality Assurance Division

PSC/dm

THE PORT AUTHORITY OF NEW YORK & NEW JERSEY

M E M O R A N D U M

TO: R. Catlin, G. Doherty, W. Fife, R. Goode, G. Jensen, R. Linn, J. Miller, M. Ronis, R. Sarles, S. Smolenski, E. Takla, V. Volpicelli, J. Zitelli
FROM: Ennala Ramabhushanam
DATE: May 18, 1989
SUBJECT: TENANT REVIEWS - LANDSCAPING

COPY TO: I. Angelet, P. Cooper, J. Cosenza, R. Davidson, V. Dovletian, E. Fasullo, L. Lupinacci; TCRU/Design Standards Staff; File

Effective immediately, TCRU/Design Standards will no longer review the landscape portion of any given tenant contract document submission, unless specifically requested, in writing, to do so by the Line Department/Facility.

Please inform your respective staff of this TCRU/Design Standard's procedural change.

Ennala Ramabhushanam

Ennala Ramabhushanam, P.E.
Manager
Quality Assurance Division

PSC/rr

THE PORT AUTHORITY OF NEW YORK & NEW JERSEY

M E M O R A N D U M

To: V. Volpicelli, Manager, Airport Facilities Division
From: Ennala Ramabhushanam
Date: June 22, 1990
Subject: **EWR - TENANT ALTERATION APPLICATION NCR-51 - HERTZ TEMPORARY TRAILER - PVC ELECTRIC WIRE INSULATION**

Copy To: T. Bell, P. Cooper, V. Dovletian, E. Fasullo, L. Lupinacci, E. Takla, File

Port Authority policy prohibits the use of PVC electric wire insulation and/or conduit within building interiors because of the highly toxic fumes which this material emits under a fire condition. However, various Port Authority Facilities have occasionally requested that this prohibition be waived because of "special" circumstances. Such requests are evaluated on a case-by-case basis.

In this particular case, the project's contract documents, reviewed and approved by the Engineering Department, specified non-PVC insulation. Despite this specification, the fabricator built, and delivered to the site, the trailer using PVC insulation. The erection of the trailer was allowed to proceed to virtual completion before the policy violation was brought to our attention - two days prior to this writing.

At your request, my staff has evaluated the trailer's current status, and, not withstanding the PVC insulation, have confirmed that the contract documents are code conforming. Because the structure is temporary and only one story high, with ample exiting capacity, your request for a waiver from the Port Authority PVC policy for this specific project is approved.

for Ennala Ramabhushanam, P.E.
Manager
Quality Assurance Division

Concurred:

R. M. Monti
Director of Engineering &
Chief Engineer

# Table of Contents

TABLE OF CONTENTS


| | SECTION |
|---|---|
| TABLE OF CONTENTS | 1 |
| INTRODUCTION | 2 |
| GENERAL REQUIREMENTS | 3 |
| CONCEPTUAL REVIEW | 4 |
| ARCHITECTURAL | 5 |
| STRUCTURAL | 6 |
| GEOTECHNICAL | 7 |
| CIVIL | 8 |
| ELECTRICAL | 9 |
| MECHANICAL | 10 |
| PLUMBING | 11 |
| FIRE PROTECTION | 12 |
| PROTECTION FROM AIRPORT RAMPSIDE FUEL SPILL FIRE | 13 |
| MATERIALS, OPERATIONS, AND EQUIPMENT. APPROVAL AND INSPECTION | 14 |
| ENIRONMENTAL | 15 |
| ATTACHMENTS | 16 |

## ATTACHMENTS

### ATTACHMENT I

SPECIFICATIONS GOVERNING THE FLAMMABILITY OF CARPETS
SPECIFICATIONS GOVERNING THE FLAMMABILITY OF DRAPERY AND CURTAIN MATERIALS
SPECIFICATIONS GOVERNING THE FLAMMABILITY OF UPHOLSTERY MATERIAL AND PLASTIC FURNITURE
SPECIFICATIONS GOVERNING THE FLAMMABILITY OF PLASTIC LAMINATE AND WOOD VENEER FURNITURE

### ATTACHMENT II

ADDITIONAL TAXIWAY PAVING

### ATTACHMENT III

REQUIREMENTS FOR PROTECTION OF STEEL OR CAST IRON UNDERGROUND PIPE

### ATTACHMENT IV

NEW YORK CITY MUNICIPAL FIRE ALARM

### ATTACHMENT V

POTENTIAL FIRE GEOMETRY (AVIATION RAMPSIDE FUEL SPILLAGE)

### ATTACHMENT VI

PLASTER CEILING DESIGN STANDARDS

# Introduction

## SECTION 2

## INTRODUCTION

This manual is published to present the criteria to be considered by tenants at Port Authority facilities in connection with construction work proposed to be performed by a tenant in addition to those that may be required under the agreement with the tenant. This manual also covers the scope of review by the Port Authority Engineering Department of Tenant Construction or Alternation Application and the plans, and specifications attached thereto submitted by tenants in connection with proposed construction or alterations. It shall not be deemed to imply that there will not be additional reviews by other Port Authority Departments.

Construction documents for tenant alterations will be reviewed by the Engineering Department for compliance with applicable Codes and Port authority engineering standards. In the absence of a specific code provision, the manual sets forth the applicable standards to be followed by tenants except as may otherwise be required of the tenant. All drawings, reports, computations and specifications required shall reflect the existing construction as well as proposed work in order to determine compatibility with existing conditions at facilities.

In this regard, a list of all documents and guidelines transmitted to the tenant by the Facility, affecting the review process, will be made available along with the construction documents, whenever available.

The Tenant Construction Review Unit of the Engineering Department will review the Tenant Construction or Alteration Application submitted by the tenant in accordance with the criteria included in this manual. The responsibility for engineering design shall remain with the Tenant's Professional Engineer or Architect preparing the design. The Tenant Construction Review Unit will not impose solutions to engineering problems but will comment on the design presented.

# General Requirements

3

SECTION 3

GENERAL REQUIREMENTS

1. All proposed construction shall be submitted for review with a completed "Tenant Construction or Alteration Application" (Form PA531), which shall be provided to the tenant by Port Authority staff.

2. Review material, such as drawings, reports, computations and specifications required in connection with the proposed construction shall be attached to and form a part of the Tenant Construction or Alteration Application and shall reflect the existing construction as well as the proposed work and be sealed and signed by the architect or engineer of record licensed in the state in which the proposed construction is to be performed. The architect/engineer indicated on the Application shall be considered the A/E of record.

   Where the A/E of record submits documents prepared by other consultants, he is responsible for assuring that the documents from all the consultants are properly coordinated.

   Where the consultants have been acknowledged by the A/E of record, either in the Alteration Application or on the drawings, the documents may be sealed and signed by the consultants responsible for them.

   Where the tenant retains more than one consultant functioning independently of one another, they each become an A/E of record for the scope of their work, for which a separate Alteration Application must be submitted, and each consultant shall seal and sign the documents he submits.

   Responsibility for design or Code compliance shall not be delegated to contractors.

3. In accordance with the policy of the Port Authority of New York and New Jersey, the tenant shall comply with the provisions of all federal, state, municipal, local and departmental laws, ordinances, rules, regulations and orders that may affect the contract and all individuals involved therein. Where stricter requirements apply, i.e., those contained in the specifications or drawings, they shall be followed. The tenant or his agents shall not apply for any variance, license, waiver or permit in the name of or on behalf of the Port Authority.

4. Voluntarily installed systems, such as sprinklers, alarms, etc., shall comply with the provisions of the Building Code for such syste

# Conceptual Review

## CONCEPTUAL REVIEW

at the tenant's request.

### I. GENERAL

A Conceptual Review is provided to supplement consultants' feasibility study, It informs the consultants of established design criteria and pre-existing building conditions that determine code compliance or PANY/NJ requirements affecting the proposed work. This review shall be limited to fundamental concepts and/or items that may significantly affect the design. related to the criteria in this Manual.

Submitted plans shall indicate conformance to the applicable codes and design criteria.

The scope of the Conceptual Review ~~shall~~ may include but not be limited to the following items:

### II. BUILDING CODE

1. Occupancy group and construction classification of the altered and adjacent areas.

2. Fire integrity of spaces in the building as it applies to shafts, rating of interior separations, exterior walls and sprinkler requirements.

3. Egress. Area occupant load and adequacy of egress shall be established; or tenant's architect/engineer may list the applicable sections of the Code on which the design is based. New tenant egress scheme shall be coordinated with existing conditions, e.g.,

   a. In the IAB, where basic egress conforms to an Old Code, stairs are provided from each floor on the basis of 75% of tenant space used as assembly (1 person per 10 S.F.) and 25% office (1 person per 100 S.F.).

   b. Also on the 3rd floor of the IAB an "exterior passageway" of a minimum predetermined width is laid out to which egress can be made.

   c. On the third (3rd) floor of the Terminal Building at LGA, a Safe Area exists in compliance with Article 8 of the 1968 Code as part of the overall means of egress from the floor. The Safe Area consists of the central east-west corridor together with the public areas at the termination of the connectors from the parking garage.

4. Special-Structural conditions, including foundations.

5. Special or unusual mechanical or electrical problems affecting environmental, energy or power requirements.

6. Deviations from Code provisions.

7. Existing structures shall be reviewed for existing Code violations.

III. PANY/NJ CRITERIA criteria -

Note: See the subsequent Sections of this Manual for more specific

1. Sprinklers in conveyor spaces & inaccessible to fire fighting equipment.

2. Adaptation of Code and NFPA standards to loading bridges, hangars and terminal buildings, etc.

3. Protection of airport buildings ~~areas exposed to~~ from potential fuel spillage ~~and drainage~~ fires.

4. Requirements for ~~carpets~~, draperies, furniture, etc.

V. COORDINATION WITH FACILITIES

1. Electrical; New power requirements shall be indicated.

2. Water supply; Coordination of any demand for chilled water, high temperature water, domestic water, high pressure sprinkler supply water, and connections to the fire protection loop, shall be fully described.

3. Any work affecting the fuel lines shall be specified.

(5). PVC pipes, ducts, conduits & wires shall not be used within buildings.

# Architectural

5

E. World Trade Center

1. In towers A and B public corridors shall have a two (2) hour rated construction and doors opening into these corridors shall be 1½ hour fire rated self closing.

ARCHITECTURAL

I. GENERAL

The scope of the architectural review shall comprise compliance with the applicable codes, standards, and design criteria listed below.

II. CODES AND REGULATIONS

A. In New York City:

New York City Building Code and its Reference Standards
~~The Reference Standards of the Building Code~~
New York City Fire Prevention Code and directives
New York City Local Laws
Rules of the Board of Standards & Appeals (BS&A)
New York State Labor Laws
New York State Multiple Dwelling Laws (Hotels)
~~Applicable Flood Control~~
New York State Energy Conservation Construction Code
~~Building Construction Code of the State of New York (Provisions for the Physically Handicapped)~~
Directives & Memoranda of the Department of Buildings

B. In New Jersey:

State Uniform Construction Code, its sub-codes with their Supplements and Reference Standards (its bulletins and)
~~BOCA Basic Building Code~~
~~Reference Standards of BOCA~~
Barrier-Free Design, Rev. 11.3.88
NJAC - Title 7 - Environmental Protection Laws
Applicable Flood Control
N.J. Uniform Fire Code (#409) (#416)

III. STANDARDS

The latest applicable National Fire Protection Association (NFPA) fire codes shall be used as reference standards for hangars, terminal and cargo buildings, loading bridges and computer rooms.

IV. PORT AUTHORITY DESIGN CRITERIA (#417)

A. General

1. In unsprinklered areas, upholstered materials, furniture, ~~carpeting~~ and draperies shall conform to the specifications governing flammability. See ATTACHMENT I.

2. All baggage handling areas and conveyor spaces inaccessible to fire fighting equipment shall be provided with a sprinkler system. Ceilings with layin panels are inaccessible

B. Airports

1. General

a. The means of egress shall be designed for an occupant load consisting of passengers (100% occupancy of aircraft), meeters and greeters, and permanent staff, based on maximum anticipated flight schedules (such as holidays or other seasonal peaks) and a two (2) hour delay of flights. Consideration shall be given to locations of concentrated crowding, rather than assuming uniform distribution of occupants over the entire building.

b. In terminal buildings, concessions serving the public shall be considered as part of the public space. Storage space belonging to concessions shall be enclosed as required by code. Also, adjacent concession areas shall be separated from each other as required by code for different tenancies.

2. Kennedy Airport

a.

3. La Guardia Airport

a.

3. Conveyor belting shall be certified to be the best commercially available as to flame spread rating and smoke development characteristics.

4. Storage under canopies (such as at cargo buildings) shall be considered as storage occupancy, a moderate hazard.

5. Baggage handling (as opposed to storage) spaces shall be classified as occupancy group B-2 in New York City, and S-2 in New Jersey.

6. Plaster Ceiling Design Standards (See ATTACHMENT VI)

B. 2. Kennedy Airport

b. On the third floor of the International Arrivals Building (IAB), an "exterior passageway" of a minimum predetermined width shall provide means of egress from the floor.

(a) IAB is considered to conform to construction classification 1B, i.e. nominal fire rating of three (3).

C. 3 LaGuardia Airport

a. Terminal Building

a. The main building is considered to conform to construction classification 1B.

b. The fingers are unprotected steel (1E) separated from the main building and subdivided by fire shutters.

c. On the third (3rd) floor of the Terminal Building at LGA a Safe Area, in compliance with Article 8 of 1968 Code, constitutes part of the overall means of egress from the floor.

D. P.A. Bus Terminal

1. Bus Terminal Extension
An egress analysis is provided in the memo, D.M. Hahn to W. Giordano, dated July 17, 1976, and accompanying report.

2. Existing Bus Terminal
The design of tenant areas opening onto the Main Concourse shall conform with City Building Code Section C26-604.3(h)(3)d3 for "Street Floor Lobbies".

2. Bus Terminal North Expansion
For the code analysis see document dated 4.11.84

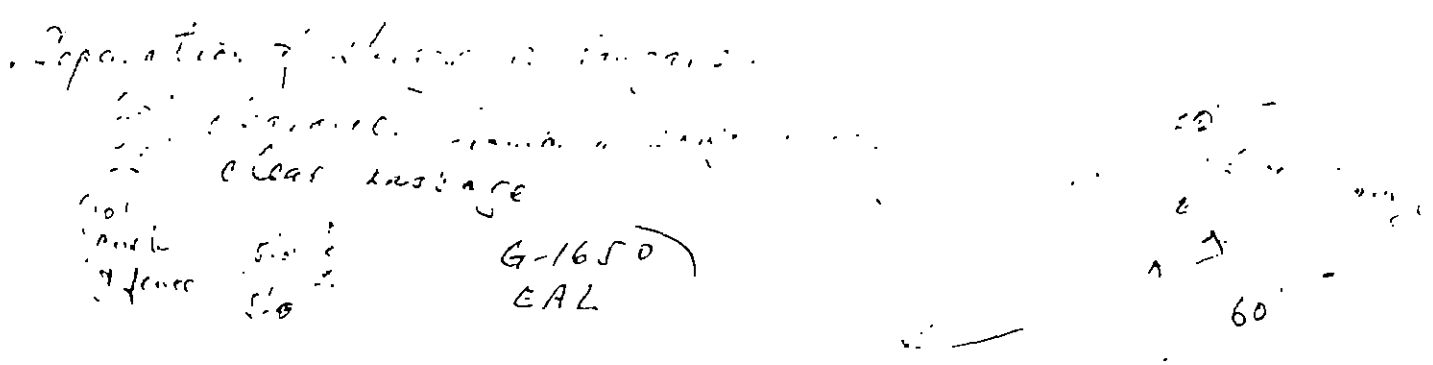
G-1650
EAL
60

## V. DETAILS OF ARCHITECTURAL REVIEW

The following are representative of details reviewed.

1. The review shall extend to existing violations.

2. Occupancy (use) of spaces, construction classification (hourly rating of the structure), and their compatibility.

3. Requirements for sprinklers, standpipes, smoke detectors, fire alarms.

4. Provision(s) for the handicapped.

5. Compartmentation of spaces (rated segregations, shafts, etc.).

6. Fire protection of building components and finishes (includes verifying documentation that all materials and equipment used are of approved type).

7. Egress, establishing occupant load and exiting capacity.

8. Verification of strength and markings of all glass subject to human impact.

9. Provision of plumbing fixtures (toilets, drinking fountains, etc.).

10. Application of NFPA (National Fire Protection Association) Codes to hangars, terminal buildings, ~~((terminal and cargo buildings))~~ loading bridges, cargo buildings, and computer rooms.

11. Protection of airport buildings from fires at rampside points of potential fuel spillage (fuel hydrants, fill and vent points, and catch basins). See Section 13 of Manual.

12. The Application of PANY/NJ Specifications Governing the Flammability of Upholstery and Plastic Furniture, Carpeting, and Drapery. See ATTACHMENT I.

13. Code requirements of inspection responsibilities of tenant's consultants.

14. Requirement of architect's or engineer's seal and signature on drawings and design documents.

15. To insure the proper operation of fire shutters in the conveyor system, it is required that a positive means be designed for preventing obstructions interfering with their operation. In order to fulfill their purpose rated doors shall be integrated with:

    a) smoke detectors, conveniently located for detection in order to actuate the motorized doors and the alarm system.

    b) Leading edge or electric eye to permit passage of an obstruction on the conveyor by retraction of conveyor door.

    c) Emergency power for the operation of rated door and an adequate portion of the conveyors to enable passage of obstruction at rated door.

    d) Operation of other smoke and heat detectors within the fire zone shall also actuate these doors.

16. Where spaces are provided with grilled openings for entrance and exiting, a safe means of egress shall be provided for the employees who may stay inside the space after the grill is closed, consisting of

    a) a door in compliance with the Code requirements, or

    b) an approved device that will open the grill from inside.

17. See SECTION 12 for Fire Protection, and Section 13 for Protection from Rampside Fires.

• Requirement of markings on glass doors and sidelights as per B&TA rules #501-68-SR.

# Structural

6

## STRUCTURAL

### I. GENERAL

A. The scope of the structural review shall cover compliance with Codes (requirements), conformance with engineering practices, structural integrity and fire protection.

B. Computations shall be submitted with all structural plans.

### II. CODES AND REGULATIONS

A. New York City

Building Code of the City of New York

B. New York City Rules and Regulations relating to:

1. Resistance to Progressive Collapse Under Extreme Local Loads (Bldg. Dept.).

2. Design of Composite Construction with Metal Decks or Lightweight Concrete (Bldg. Dept.).

3. Structural Designs Based on Electronic Computer Computations (Bldg. Dept.).

4. Design and Installation of Curtain Wall Systems (Bldg. Dept.).

5. Application and Protection of Sprayed-On-Fireproofing (BSA Cal. #118-68-GR).

6. Masonry Parapet Walls (Bldg. Dept.).

7. Arc and Gas Welding and Oxygen Cutting of Steel Covering the Specifications for Design, Fabrication and Inspection of Arc and Gas Welded Steel Structures and the Qualification of Welders and Supervisors (BSA Cal. #1-38-SR).

8. Manufacture, Testing and Use of Concrete Masonry Units (BSA Cal. #639-40-SR).

keep AREA

B&E New Jersey

The New Jersey Uniform Construction Code (NJUCC).

~~D.~~ New Jersey Municipal Rules and Regulations, if applicable.

III. STANDARDS

Already in NY NJ

Reference - Engineering Practice Standards

| | |
|---|---|
| AASHTO | American Association of State Highway and Transportation Officials |
| ~~AISI~~ | American Iron and Steel Institute-Tentative Criteria for Structural Applications of Steel Cables for Buildings - 1966 |
| AREA | American Railway Engineering Association |
| ~~ASCE~~ | American Society of Civil Engineers |
| ~~AFDM~~ | Armed Forces Design Manual - TM5, Seismic Design for Buildings |
| ~~FGMA~~ | Flat Glass Manufacturers' Association |
| ~~IMIAWC~~ | International Masonry Industry All Weather Council, International Masonry Institute |
| ~~NAAMM~~ | The National Association of Architectural Metal Manufacturers |
| PCI | Prestressed Concrete Institute |
| ~~PPG~~ | Glass Thickness Recommendations to meet Architect's Specified One-minute Wind Load |
| ~~SBC~~ | Standard Building Code |
| ~~SDI~~ | Steel Deck Institute - Design Manual for Composite Decks, Form Decks and Roof Decks; Diaghragm Design Manual |
| ~~UBC~~ | ~~Uniform Building Code~~ |

IV. PORT AUTHORITY DESIGN CRITERIA

A. Wind and snow loads for hangars, buildings, equipment and appurtenances in New Jersey.

1. Wind Load

a. The minimum design wind load for the structural framing shall be 20 psf up to 30 feet with an evaluation to be conducted generally following the latest draft of ANSI A58.1 considering the siting of the building relative to its type of wind exposure.

b. Internal pressures shall be included in the design for primary framing, bracing, roof components and external wall components.

In any case prior to submittal of a tenant application, a minimum wind loading diagram can be supplied for the proposed tenant construction.

B 2. Roof Live (Snow) Load in New Jersey

a. The minimum roof (snow) live load for flat roofs shall be 30 psf.

b. Evaluate the roof snow or canopy loads with full consideration given to:

| | |
|---|---|
| i | Roof exposure |
| ii | Roof themal condition |
| iii | Building occupancy and function |
| iv | Roof slope |
| v | Unloaded portions |
| vi | Unbalanced snow loads |
| vii | Snow drifts on lower roofs canopies and projections |
| viii | Sliding snow |
| ix | Extra loads from rain-on-snow |
| x | Ponding loads |
| xi | Consideration of loads in excess of design value. |

F B. Loading Bridges (Airports)

1. Minimum Live Loads: Floor - 40 psf or a concentrated load of 300 lbs.

Roof - 30 psf

2. Wind loading: developed from the latest American National Standards Institute - Building Code Requirements for Minimum Design Loads in buildings and other structures, ANSI A58.1, for flat open airport terrain; with a minimum lateral wind loading of 12.5 psf and 25 psf for the extended (operational) and retracted (stowed) modes of operation, respectively.

3. Minimum Load Combinations:

(a) Extended: DL + LL + RLL
DL + LL + 1/2RLL + WL
DL + WL

(b) Retracted: DL + RLL
DL + RLL + WL
DL + WL

B. Ceilings

1. Cement plaster ceilings — see ATTACHMENT S1
2. Ceilings in N.I. — see ATTACHMENT S2
3. Ceilings in WTC — see ATTACHMENT S3

4. Minimum Stability Factors:

| | |
|---|---|
| Overturning | 1.5 |
| Sliding | 1.5 |
| Uplift | 1.5 |

5. Codes (except where stricter requirements are noted):

(a) N.Y.C. - New York City Building Code

(b) N.J. - The Construction Code (BOCA)

6. Design, Fabrication and Construction Specifications:

a. American Institute of Steel Construction (AISC) Specification for the Design Fabrication and Erection of Structural Steel for Buildings.

b. American Iron and Steel Institute (AISI), Specification for Design of Cold-Formed Steel Structural Members; Tentative Criteria for Structural Applications of Steel Cables for Buildings (1966).

c. American Welding Society (AWS), Structural Welding Code, AWS D1.1.

d. American Concrete Institute - Building Code ACI-318.

e. SDI - See Structural - Section III

f. Glass - See Structural - Section III

g. Aluminum - See Structural - Section III

Highway Signs and Luminaires: Standard Specifications for Structural Supports for Highway Signs, Luminaires and Traffic Signals, American Association of State Highway and Transportation Officials, (AASHTO).

D. Vehicular Traffic:

1. HS15-44 minimum loading for departure and arrival ramps servicing passenger terminals. Use AASHTO design.

2. All other ramps servicing cargo facilities or road overpasses; AASHTO design using HS20 minimum loading.

3. Minimum clearance over roadways and ramps, 14' -6".

~~E. Plaster Ceiling Design Standards~~

(A) All structures shall be designed for earthquake (Zone 2) forces, BOCA provisions shall apply. (including those in N.Y. State)

V. DETAILS OF STRUCTURAL REVIEW

The following are representative of details reviewed.

A. The design calculations shall include but not be limited to:

1. Design criteria and applicable Codes; including, in the case of ANSI, exposure and classification categories.
2. Reference Standards.
3. Materials.
4. Type of construction and foundations.
5. Design loads; including wind and other existing forces.
6. Machinery and equipment loads in excess of 1000# including an evaluation of any potential vibration.
7. Allowable soil bearing capacity.
8. Pile type and capacity.
9. Design analysis and drawings of all connections other than AISC standard framed or seated beam connections.
10. Analysis and sketches of expansion joints.
11. Design of bracing systems and rigid joints.
12. Wind drift and deflections.
13. Ponding.
14. Computer print-outs and users' manuals.
15. Investigation of (superimposed) loads from adjacent construction on structure and foundation.
16. Investigation of existing structural system and foundations under additional loads due to alterations.

B. Drawings shall include but not be limited to the following information.

1. Design Code and Reference Standards.
2. Materials.

3. Design live loads, wind and other forces.

4. Machinery and equipment loads in excess of 1000# including footprints or support layout plus technical details of vibration isolators.

5. Allowable soil bearing capacity.

6. Pile type, capacity and minimum tip elevation.

7. Column schedule showing accumulated design load at each level for dead and live loads.

8. Stress diagram for trusses.

9. Datum and ground water elevations.

10. Typical moment connection details.

11. Details of non-standard connections.

12. Fire protection details and materials.

13. Listing of materials subject to controlled inspection.

14. Construction sequence.

C. Specifications:

1. Shall clearly define the scope of work and materials required for the contract.

2. Shall include limitations, restrictions or conditions due to existing environs and/or requirements for the methods of construction or staging.

# Geotechnical

7

SECTION 7

GEOTECHNICAL

I. GENERAL

A. The scope of the geotechnical review shall relate to the determination of supporting soil characteristics and the choice of a foundation system compatible with the structure to be supported in compliance with the applicable Building Codes and, in the absence of definitive Code requirements, P.A. standards and established practice.

B. Soils analyses, reports and design criteria shall be submitted with contract drawings and specifications.

including flood and Zone 2 earthquake forces.

II. CODES AND REGULATIONS

A. New York City
Building Code of the City of New York.

B. New Jersey
~~BOCA code as amended by the~~ New Jersey Uniform Construction Code (NJUCC), — BOCA

III. STANDARDS

A. Applicable Flood Control Regulations. BOCA provisions for Zone 2 earthquake

IV. PORT AUTHORITY DESIGN CRITERIA

A. P.A. Specifications ~~on~~ The following are recommended

1. Steel Pipe Piles
2. Steel H Piles
3. Timber Piles
4. Dense Graded Aggregate Base Course.
5. Excavation, Backfill and Fill.

6. Pile load tests
7. Dynamic pile testing
8. Slurry wall
9. Dredging
10. Rock excavation
11. Rock dowels

B. In New Jersey the frost depth shall be considered to be three (3) feet.

PP Note: Single acting steam or air hammer is recommended for pile driving in order to ensure the development of energy required by design. Where other types of hammers are used Dynamic Pile Testing shall be performed to substantiate the minimum

7.1

V. DETAILS OF GEOTECHICAL REVIEW

The following are representative of details reviewed:

A. Required Reports

1. Verification - Stabilized Overburden

2. Bearing Capacity of Nominally Unsatisfactory Bearing Material.

3. Alternate or Similitude Method for Pile Load Verification

4. Substantiation of Higher Allowable Pile Loads

B. Calculations and reports to be reviewed shall include but not be limited to the following:

4 1. Stability calculations of earth slopes and embankments, deep excavations, structures, during and at the completion of construction.

5 2. Dewatering and seepage and analysis and control.

6 3. Effects of construction operations on adjacent properties.

7 4. Earth and rock anchors.

8 5. Sand drains, surcharging, deep compaction and other methods that may affect ajacent properties.

1 6. Results of site geotechnical investigation, including test borings and laboratory tests; also review of previous data obtained by the Port Authority or others.

2 7. Estimates of settlement resulting from the proposed construction (structures, pavements, utilities) at the construction and adjacent sites.

3 . Where it has been established that post-construction settlements of foundations be monitored, the monitoring program and its effect on the superstructure, shall be submitted for review.

## CIVIL

### I. GENERAL

The scope of the civil review shall relate to the conformance of paving and utilities with the standards and guidelines established below. Excluded from the civil review are those areas located on Marine Terminal facilities where the resultant construction will not have an adverse effect upon the operations of either Port Authority or adjacent tenant operated systems.

### II. CODES AND REGULATIONS

A. Utilities

1. In New Jersey, the Administrative Code, Title 7, Environmental Protection, shall be followed where applicable, e.g.,

| | |
|---|---|
| Chapter 9 | Water Pollution Control |
| Chapter 10 | Safe Drinking Water Act |
| Chapter 11 | Bureau of Water Facilities Operation |
| Chapter 13 | Water Supply and Flood Plain Management |
| Chapter 14 | Water Pollution Control Act |

### III. STANDARDS

See also the ENVIRONMENTAL SECTION 15.

A. General

1. All site work shall conform to the latest details as shown in the appropriate Standard Drawings and Design Standard Sheets on file with the Engineering Department.

B. Paving

1. Paving of common or P.A. taxiways or aprons shall conform to latest P.A. standards.

2. Paving within the airports tenants' lease line shall be designed in accordance with the latest FAA advisory circular, but in no case shall the pavement design thickness be less than that shown on the appropriate P.A. standard drawings #062.001 and 062.002. Erosion pavement shall be required wherever a blast from the aircraft may blow debris on adjacent property.

3. Drainage manholes and catch basins shall conform to the PA. Standard Drawings #010.010, 010.010A, 010.012, 010.013, 011.002, 020.011, 020.013, 020.014 020.019, 025.001.

3. Roadway pavements shall conform as a minimum to the P.A. Standard Drawings #062.003 and 062.001.

4. Sidewalk details shall conform to P.A. Standard Drawing #062.004, and the applicable standards for the physically disabled.

5. See sketch "Additional Taxiway Paving", ATTACHMENT IV. C/

C. Drainage

1. Surface drainage of airport aprons shall comply with NFPA 415.

2. Drainage pipes shall be properly supported as per P.A. Standards #041.001 and 043.001.

D. Utilities

1. All utility appurtenances shall be designed to withstand the heaviest anticipated aircraft or vehicle load.

2. Where heavier aircraft or other vehicles have been introduced, underground utilities shall be checked to insure the added load will not cause any damage.

3. Requirement for pipe encasement shall conform to ATTACHMENT III.

4. In New York City, whenever the city sewer is within the P.A. facility boundary and affected in any way by the tenants' new work, this work shall be coordinated with the appropriate City Department through a designated liaison person in the Chief Engineer's office.

5. In New York City, whenever the new tenant's sewer connection has to be made to the City Sewer outside P.A. facility, the Tenant shall be required to apply directly to the appropriate City Department. Evidence of City's approval shall be presented to P.A. prior to start of installation.

6. All effluent from floor drain in hangars, garages and other locations contributing pollutants shall be processed by settling basins, filters and/or separator before discharging into the sewer.

## IV. DETAILS OF CIVIL REVIEW

The following are representative of details reviewed:

1. Location and plot plan with lease line showing all coordinates shall be shown on drawings.

2. If existing paving and/or utilities are damaged during the new construction, provision shall be made for their repair and restoration according to the requirements of the Resident Engineer.

3. All areas to be paved shall indicate pavement details.

4. Whenever an existing utility service is to be interrupted for the purpose of connecting new utilities, the proper facility personnel shall be notified in advance.

5. All underground utilities (new and existing) shall be shown and distinguished.

6. Details for all utility appurtenances shall be shown.

7. Surveyors shall be licensed in the state where the work is being performed.

# Electrical

9

SECTION 9

ELECTRICAL

I. GENERAL

The scope of the electrical review shall consider the compliance of wiring and equipment installation and alteration with the codes and standards listed below.

II. CODES AND REGULATIONS

A. New York City
National Electrical Code
New York City Electrical Code
New York City Building Code
New York State Energy Conservation Construction Code

B. New Jersey
National Electrical Code
New Jersey Uniform Construction Code
BOCA Basic Building Code
BOCA Basic Energy Conservation Code
Illuminating Engineering Society Standard EMS-1,
Lighting Power Budget Determination Procedure

III. STANDARDS

A. NFPA 20-1980, Centrifugal Fire Pumps

B. NFPA 75-1976, Electronic Computer/Data Processing Equipment

IV. PORT AUTHORITY DESIGN CRITERIA

A. General

1. Electric Service

a. Power shall be purchased from the P.A. for: New York Airports, World Trade Center and Bus Terminal.

b. ~~5 KV~~ Power, New York Airports

High-tension

i. Shop drawings of switchgear shall be submitted for P.A. approval in advance of fabrication. Switchgear shall be inspected by the P.A. at the factory.

ii. Tenant's drawings shall include a complete one-line diagram showing all primary connections, switching and interlocks; power source, routing and feeder designations; size and type of feeder and conduit; and KVA rating; types and voltages of all transformers; and all load data in justification of the amount of power requested.

iii. Transformers shall be installed in pairs with two line switches normally closed and the tie normally open.

iv. Cable cuts and detailed drawings of ~~5 KV~~ high-tension splices shall be submitted.

P.A. → v. ~~Complete~~ specifications for the ~~5 KV~~ high-tension installation shall be ~~submitted~~ used.

c. Metering where Power is Purchased from the P.A.

i. Submetering by the tenant is prohibited

ii. Where the service is 200 amperes or less, the tenant shall furnish and install all wiring and the meter socket as directed by the P.A. Engineer. The meter socket shall be a "Delta" HQ7-IN-200A or approved equal, 480Y/277V or 208Y/120V, 4 wire, 7 jaw type with by-pass and cover. A watthour demand meter shall be provided and installed by the P.A.

iii. Where the service is in excess of 200 amperes, the tenant shall furnish and install all wiring, meter pan and C.T. cabinet as directed by the P.A. Engineer. The meter pan shall be in accordance with Table VII and C.T. cabinet shall be in accordance with Table VIII, of Con Edison's "Requirements for Electric Service Installations". A bottom connected watthour demand meter and bus bar type C.T.'s shall be provided and installed by the P.A. KW values of connected, peak and expected additional loads shall be submitted to enable the P.A. to determine the C.T. ratios to be used.

iv. In coordination with the Facility, submit requirements for meters to be purchased by the P.A.

d. ~~i.~~ At facilities where power is to be purchased from the local utility company, the installation shall be inspected by the P.A. Resident Engineer prior to final connection to the service, which shall fulfill utility company requirements for inspection.

i. Submetering by the tenant is prohibited.



d. Where power is purchased from a local utility company

with the Facility

i. Utility company requirements for inspection shall be coordina

2. For fire detection and alarm requirements see Section 12.

3. For loading bridge requirements see Section 13.

4. For fire shutters in conveyor systems see Section 5.

5. Exploded view drawings of electrical manholes in which the Tenant performs any work shall be submitted to the Resident Engineer for review.

6. For the use of PVC see Section 12.

6. PVC conduits & wires shall not be used within city buildings.

B. Port Authority Bus Terminal

Emergency Power System.
Emergency loads (exit signs, exit and emergency lights) shall be connected to the building emergency power system.

B. World Trade Center

1. Materials

a. Communications as well as power wiring shall be run in metallic raceways. No exceptions shall be made unless by specific request, for communications wiring only. Such request shall be supported by documentation stating that the wiring will not increase toxic gas, smoke and/or flame hazards in the sealed environment of the World Trade Center.

b. Light diffusers shall not be made of plastic or other combustible materials.

2. Conductors and Conduit.

Minimum wire size for power shall be #12 AWG, copper. Minimum conduit size shall be 3/4-inch. Maximum EMT size shall be 2 inches.

3. Afterset Fittings; Underfloor Cell Wiring.

a. Each new or existing afterset fitting shall require two Palusol firestop packets, one on each side of the afterset baffle.

b. All floor outlets to be removed or abandoned shall have all wires removed back to the panel or header duct and the afterset fitting removed. The

4. Exit signs, exit lights, and fire alarm control panels and devices shall be connected to a source of emergency power. Note that a connection to the street side of the main panel is not possible in the World Trade Center. Emergency power may be taken from storage battery packs or connected to the building emergency power riser is available.

underfloor cell shall be capped with a metal slug and the hole filled flush with concrete cement.

3. Grounding; Ground-Fault Protection.

a. Wherever a grounding conductor is required (feeders to motor loads greater than 1/8-horsepower included), a separate ground wire shall be installed.

b. On raised floors, a #6 grounding wire shall be connected to every fourth pedestal of the floor system, and to the nearest building steel by means of a thermal type welded connection.

c. Ground-fault protection shall be provided for all receptacles and equipment located near running water, such as electric water coolers.

4. — Delete see page 9.

5. Energy Conservation.

For allowable the connected load in watts per square foot, see published W.T.C. guidelines.

V. DETAILS OF ELECTRICAL REVIEW

The following are representative of details reviewed.

1 A. The review shall extend to existing code violations.

A one-line diagram giving

2 B. The power distribution system (feeders, switchgear, transformers, panels and overcurrent protective devices), including coordination of plans regarding connections and available capacities with P.A. utilities. Source identification, conductor types and sizes, connected and demand loads, basis of source capacity, and adequacy of overcurrent protection shall be presented. Characteristics of special loads e.g. large motor loads shall be detailed.

& voltage drop,

3. —

5 C. Wiring methods (conductors and raceways).

6 D. Grounding, including system grounding of derived systems such as transformers and generators.

E. Energy conservation as embodied in governmental regulations.

F. Communications wiring with regard to radiation, electromagnetic interference, electrical safety and fire hazards.

G. Signal wiring and emergency power for fire alarm and detection systems.

H. Emergency power for lighting, exit lights and signs and opening protectives.

I. Computer room disconnecting means for electronic and HVAC equipment.

J. ~~Equipment for compatibility with occupancy (including explosion-proof requirements) and type acceptance (BS&A, UL, etc.).~~

K. Plastic light diffusers for Code requirements.

L. Metering installation, with regard to applicable PANY/NJ or utility standards.

M. Alarm, detection and sounding devices. See Section 12. from within electric rooms.

N. Physical safety, such as clearances around equipment, and, exit provisi

O. Telephone installation shall not have any components in common with the power or lighting installation.

P. Transformers and capacitors that are PCB-contaminated or PCB-filled shall be identified.

Any operation that can possibly cause PCB to spill, including repairs, must be coordinated with the Resident Engineer. Facility Manager.

PCB-contaminated or PCB-filled transformers and capacitors are not permitted in the vicinity of food or feed areas.

The tenants shall provide the Resident Engineer Facility Manager with assurance that they have complied with the requirements of:

i. Toxic Substances Control Act (Federal)

ii. Regulations of federal, state and local environmental protection agencies.

⑥ The coordination of fire detection and fire suppression provisions with designs for open wiring such as in computer rooms and raised floors. See N.Y. City Electrical Code, Bulletin #126, revised 1983, and NEC Article 645 for guidance.

# Mechanical

10

## MECHANICAL

### I. GENERAL

The scope of the mechanical review shall comprise the installation and alteration of service equipment and systems, including but not limited to the following items, in compliance with the Codes and Standards listed below.

The following is a representative list of systems reviewed:

1. Heating, cooling, refrigeration. — Heating, ventilating, air conditioning, refrigeration, central plants.
2. Combustion.
3. Fire suppression systems (sprinklers, standpipes, etc.) and controls. — halon,
4. Exterior fuel burning equipment (snow melting, etc.).
5. Pressure vessels, fired and unfired.
6. Industrial processes. Bulk storage and distribution of fuel and gases (glycol, LPG, LNG, etc.).
12. ~~7.~~ Water recovery processes.
7. ~~8.~~ Airport fuel distribution systems
4. ~~9.~~ Handling (and storage) of gases or fluids that are volatile, flamable, toxic, corrosive, or potential pollutants.
10. Vibration or noise-producing equipment.
11. Acoustic and thermal insulation for mechanical systems.
13. ~~12.~~ Waste treatment equipment.
9. ~~13.~~ Battery charging spaces.
14. Elevators, escalators, conveyors, etc.
11. 15. Cargo handling equipment (ETV, etc.).
8. ~~16.~~ Energy conservation.

~~1. Fuel storage tanks~~

2. Smoke control and purge systems

10. Aircraft loading bridges & walkways.

14. Control of methane under buildings

#30 for flammable and combustible liquids,

1. The latest National Fire Protection Association (NFPA) fire codes shall be used as reference standards such as #407 and 415 for aircraft fueling and ramp drainage, #416 for terminal buildings, #417 for loading bridges, etc.

II. CODES AND REGULATIONS

A. New York City

New York City Building Code.
New York City Fire Prevention Code.
The Reference Standards of the above, such as those for Elevators, Conveyors, ASHRAE, SMACCNA, etc.
N.Y. State Energy Conservation Construction Code.
State Industrial Code Rules, where applicable.
N.Y. City Air Pollution Regulations.
Rules of the Board of Standards & Appeals (BS&A) of N.Y. City.
N.Y.C. and National Electrical Codes.

B. New Jersey

The N.J. Uniform Construction Code (NJUCC),
BOCA Basic Building Code as amended by NJUCC.
BOCA Basic Mechanical Code, where applicable.
National Standard Plumbing Code as amended by NJUCC.
BOCA Basic Energy Conservation Code as amended by NJUCC.
State Energy Conservation Regulations.
Illuminating Engineers Society Standard EMS-1.
Reference Standards of BOCA Codes.
National Electrical Code, where applicable.
Rules, N.J. Bureau of Air Pollution Control (Certification).
NJAC - Title 7 - Environmental Protection Laws.

C.

III. STANDARDS

1. ASME Safety Code for Automatically Fired Combustion Equipment.

2. See "Fire Protection", Section 12.

3. NFPA 417 for passenger loading walkways.

4. ANSI B30.13-1977, Controlled Mechanical Storage Cranes.

5. ANSI B56.1-1975, Low Lift and High Lift Trucks.

IV. PORT AUTHORITY DESIGN CRITERIA

A. 1. Systems connected to Central Heating and Refrigeration Systems shall comply with P.A. "Outline Specifications Requirements for Tenant Premises" including underground piping, conduits and meters. Appurtenances shall be selected for maintenance compatibility with existing PA equipment.

B. Bus Terminal

For the HVAC criteria controlling the HVAC design, see:

Attachment M1 for the South Building

Attachment M2 for the North Extension

Delete page 10X-2 for Bus Terminal

B. For P.A. Criteria related to the Bus Terminal see "Fire Protection", SECTION 12

C. For World Trade Center, see published W.T.C. guidlines for HVAC and fire safety systems

V. DETAILS OF MECHANICAL REVIEW

The following are representative of details reviewed:

A. The review shall extend to existing code violations.

B. In reviewing a proposed project, particular attention shall be given to:

1. General system design.

2. Coordination of all new work with existing conditions.

3. Review of materials, operating and safety controls, equipment approval (BS&A, MEA, etc.).

4. Requirements for system and equipment testing and inspection.

C. Work affecting the Aviation Fuel Servicing systems, and Central Heating and Refrigerating Systems, including additional load requirements, piping and metering, shall be coordinated with the Chief Mechanical Engineer.

D. Special attention shall be directed to the following items:

1. A complete schedule of symbols and abbreviations used on the drawings shall be provided.

2. HVAC

a. Shaft requirements for air ducts.

b. Fire dampers at ducts through rated partitions and floors.

c. Installation details for fire dampers to stay in place if duct is disrupted. (See SMACNA Fire Damper Guide). For WTC see WTC Standard Details. Access doors shall be accessible.

d. Smoke detectors and smoke/fire dampers at ducts entering "Safe Area", exit passageways and lobbies.

e. Fire detector and smoke detector requirements for fan systems to shut fans and smoke dampers automatically and transmit signal.

f. Fire resistive insulation materials.

g. Air filters in ventilating systems (Class 1 or 2 with required fire protection systems).

h. Ventilation Index Schedule.

i. Smoke control systems

3. Commercial type cooking equipment: Grease ducts, extractors, dampers, insulation, fixed pipe fire extinguishing systems in hoods and ducts.

4. Noise and vibration control.

5. Energy Conservation: Building envelope analysis; design criteria; thermal performance of component systems.

6. Bulk storage of liquids and gases: Tanks, supports, anchorage, clearances, electrical grounding, Fire Dept. regulations if flammable, leak detection.

7. Work affecting the airport fuel distribution system shall be coordinated with the existing airport system for compatibility, surge pressure safety and system design check. Depending on the nature of the modification, surge pressure calculation may be required.

8. See SECTION 3 for General Requirements.

8. Battery Charging spaces

(Debby, see page 10x+2

# Plumbing

11

# PLUMBING

## I. GENERAL

The scope of the plumbing review shall consider, in general, the installation of and alteration to the following systems, in accordance with the codes and Standards listed below:

1. Water supply and distribution.
2. Sanitary and storm drainage and disposal.
3. Industrial wastes.
4. Sprinklers.
5. Fire standpipes.
6. Gas piping.
7. Gasoline storage and piping.

## II. CODES AND REGULATIONS

A. New York City
- New York City Building Code and Reference Standards
- New York City Fire Prevention Code
- Rules of the Board of Standards & Appeals (BS&A)
- New York State Energy Conservation Construction Code.

B. New Jersey
- The N.J. Uniform Construction Code (NJUCC)
- The National Standard Plumbing Code as amended by NJUCC
- BOCA Basic Building Code, and
- BOCA Basic Mechanical Code, as amended by NJUCC, where applicable (Gas piping, etc.)
- BOCA Basic Energy Conservation Code
- Reference Standards of BOCA Codes
- NJAC - Title 7 - Environmental Protection Laws

## III. STANDARDS

1. See Section 12, Fire Protection.
2. National Sanitation Foundation approval for Kitchen equipment.

IV. PORT AUTHORITY DESIGN CRITERIA

A. General

1. PVC piping shall not be used in above ground and exposed locations. Also, it shall not be used unless specifically permitted by the applicable Codes.

2. Fire standpipe hose shall be approved 100% synthetic single jacket fire hose.

3. Clamps for no-hub piping shall be those manufactured by Clamp-All Corp.

4. In demolition work, unused piping shall not be abandoned, "in place". Piping shall be removed back to source or point of discharge and resulting openings plugged. Such work shall be shown on the drawings.

5. All solders used for potable drinking systems shall be lead-free

B. Airports

1. Oil separator effluents shall be discharged into the sanitary sewer system.

C. World Trade Center

1a. Gravity or pumped condensate drain pipes shall be a minimum of 1" with cleanouts at changes in direction.

b. Traps for the condensate drain pipes shall be installed only if required or recommended by manufacturer of the A/C unit. Drain lines shall be insulated.

c. To prevent scum formation in A/C drain pans, algalcide tablets shall be used as necessary.

2. Care shall be taken to place all horizontal standpipe and sprinkler piping at least 15' from any exterior wall. If unavoidable, the piping shall be insulated.

V. DETAILS OF PLUMBING REVIEW

The following are representative of details reviewed:

A. General

1. Drawings shall show a complete layout and riser diagrams.

2. An adequate extent of existing conditions and systems shall be shown to enable review of alterations.

3. Specifications for materials, equipment, fixtures, insulation, installation procedures, etc. shall be submitted.

4. The review shall extend to existing Code violations.

5. Areas of work shall be clearly identified with column numbers, north arrow, occupancy identification.

B. The following is a partial list of items to be shown in the design documents (drawings, specifications, etc.,):

Domestic Cold & Hot Water

Water service size, connection
Gooseneck at street main
Curb box and valve
Pressure reduction valve
Approved meter, hook-up and setting
Water conserving device
Fixture roughing, trim, flow controls
Expansion joints; accessibility
Hot water heater hook-up, PRV & TRV
Hot water circulation
Plugged outlets; accessibility
Backflow protection: airgaps, vacuum breakers, backflow preventers; accessibility
U.S. Public Health Service Requirements
Triturator room water requirement
Plastic materials
Piping materials - pipe, joints, lining, etc.
Insulation, fire rated; Energy Code compliance.
Testing
Hose Bibbs; flushing hydrants

Fire Standpipe

Size of water service
Separate or combined system where permitted
Curb valve and box
Meter (if required)
Number of siamese and street facing
Size of Siamese risers, cross connection
Pressure reducing valves
Yards Hydrants
Roof manifolds, valves and ball drip
Freeze Protection
Hose stations, hose lengths for full coverage
Hose size - check building occupancy and classification
Ladders for high valves
Riser control valves - supervised or chain-latched
Check valves and automatic ball drips

Riser diagram
Signs at siamese and hose stations
Pipe, fitting, materials, joints, etc.
Fire line valves
Supports
Hazardous area protection
Pressure and flow tests

Gas

Work by Utility Company
Type of service (L.P., M.P.)
Outside cut-off valve
Service sleeve location, sealing
Gas meter location and piping; distance to last outlet
Piping sizing with riser diagram
Gas regulator and vent, if required
Underground pipe "Mill Wrapping", ground cover
Gas piping, fiting materials, joints
Hazardous area protection; automatic shutoffs
Pressure to operate equipment
Tests

Sanitary

Building sewer size; directional flow connection
Building trap and pit
F.A. inlet
One full size stack
Grease traps; hook-up, flow control
Building Sanitary Drain location and sizing
Cleanouts uncovered
Expansion joints; accessibility
Back water valves
Ejector piping hook-up, venting, valves
Types of Joints
Fixture requirements-Code elongated, open front, etc.
Facilities for handicapped
Test requirements

Storm Drainage

Building sewer size; directional flow connection to sewer
Building drain size, slope; Code roof areas
Leaders size; Code roof areas
Cleanouts, uncovered
Expansion joints; accessibility
Test requirements

Oil Separator

Overall separator size, capacity
F.A. inlet
Relief vent and height
One full size stack
Overflow line, waste oil tank, vents
Cleanouts; accessibility

Gasoline and Motor Diesel Oil

Licensed Installer
Size, location, capacity, construction of tanks
Burial depth; earth cover; concrete cover
Distance from basements, pits
Corrosion protection
Size, height of vents
Tank encasement
Fill box location, identification
Pipe, fittings, joints
Piping arrangement for suction connection
Double swing joint connections
Tank supports, foundations, anchorage
Sewer protection; oil separator
Testing
Abandoning Tanks

# Fire Protection

12

SECTION 12

## FIRE PROTECTION

### I. GENERAL

A. The scope of the review shall comprise the design of various fire detection, alarm and suppression systems.

Fire Protection is an integral part of several disciplines contained in all building, mechanical, electrical and fire protection codes.

B. Before starting work on sprinkler system, foam, dry chemical, halon, or other fixed pipe fire extinguishing system, shop drawings shall be submitted to the P.A. Risk Management Division and filed with P.A. Resident Engineer or Facility Manager. A statement to this effect shall appear on the contract drawings.

### II. CODES AND REGULATIONS

A. See the architectural, electrical, mechanical and plumbing sections for the applicable codes.

### III. STANDARDS

The following are representative of standards that shall supplement the codes referred to above:

| | |
|---|---|
| Sprinklers | - NFPA 13 |
| Foam extinguishing systems | - NFPA 11 |
| Foam systems - high expansion | - NFPA 11A |
| Standpipes | - NFPA 14 |
| Carbon dioxide | - NFPA 12 |
| Halon | - NFPA 12A, B |
| Dry Chemicals | - NFPA 17 — NFPA 2 |
| Fire pumps — Signalling systems and fire detectors | - NFPA 71, 72 |
| Private fire service mains | - NFPA 24 |
| Hangars | - NFPA 409 — 231C, DHF 407 |
| Hangars - wing areas in excess of 3,000 S.F. | - NFPA 409 |

### IV. PORT AUTHORITY DESIGN CRITERIA

A. General

1. PVC pipes, ducts, conduits & wires shall not be used within buildings

1. PVC conduit, pipe or insulated wire shall not be used in above ground and exposed locations. Also, PVC piping shall not be used unless specified by the applicable Codes.

2. Conveyor spaces inaccessible to fire fighting equipment shall be provided with a sprinkler system. Ceilings with lay-in panels are inaccessible.

B. New York City Municipal Fire Alarm

Fire alarm boxes shall be furnished and installed in conformance with the provisions of Attachment IV.

C. P.A. Bus Terminal

1. See memo, D. Hahn to W. Giordano, dated July 17, 1976 for description of life safety systems.

2. a. Manual fire alarm activation shall sound the coded pre-signal gongs at facility-designated locations and send a coded signal to the AFA central station. Code indicates location.

b. Sprinkler head activation shall sound the coded pre-signal gongs at facility-designated locations and send a coded signal to the AFA central station. Code indicates location.

c. Smoke detector activation shall sound the coded pre-signal gongs at facility-designated locations, send a signal to the Suburban Bus Level alarm console and Police Desk remote printout, and send a coded signal to the AFA central station. Code indicates system activation but not zone, which is determined at the Suburban Bus Level alarm console or Police Desk.

D. World Trade Center

1. Alarm systems

a. Smoke detector signal wiring shall be #14 AWG minimum, Teflon insulated and jacketed, in conduit. Four #12 AWG wires shall connect to the two normally-closed dry contacts (one supervisory, one alarm) and to the fire alarm multiplex system junction box in the appropriate electric closet.

b. Sprinkler system tamper and waterflow switches shall be installed in conjunction with sprinkler water supply control valves and connected to the fire alarm multiplex system junction box.

E. Criteria For Interior Fire Alarm Systems

1. At least one Fire Alarm (F.A.) station shall be installed per 10,000 square feet. Additional stations shall be required to limit the travel distance to 150'.

2. One F.A. station shall be installed in each story at all natural paths of egress to the street.

3. Stations shall be readily accessible and unobstructed. In general F.A. stations shall be located at stairwells, near elevators, and at points of egress from building (natural paths of exit).

4. Sounding Devices:

   a. Shall be of sufficient number to be clearly audible to all occupants.

   b. 10" single stroke gong on interior columns.

5. F.A. Signals:

   All fire alarm station signals shall be transmitted to a central station via leased telephone lines. (Police Emergency Garage or other designated location).

   Aircraft Loading Bridges:

   An interior manual fire alarm station and gong shall be located in the Terminal Building at the building connection of the bridge.

V. DETAILS OF FIRE PROTECTION REVIEW

The following are representative of details reviewed:

1. Sprinkler and other systems using dry chemicals, foams, halogenated and other extinguishing agents shall be submitted on drawings and signed and sealed by the Architect or Engineer of Record, even if prepared by specialty manufacturers or by recognized contractor/engineers.

2. Sprinkler plans shall indicate or list the appropriate information and data specified in NFPA Standard 13 regarding available water sources, supply pressure, number and type of sprinklers, fire department connections, hazard classification, alarm devices and supervisory connections; also hydraulic computations when required.

3. A complete Fire Alarm riser diagram showing locations of all stations, gongs, control panels and wiring, shall be shown.

# Protection from Rampside Fuel Spill Fire

## PROTECTION FROM RAMPSIDE FUEL SPILL FIRE

### I. GENERAL

The following are minimum guidelines for the design of protective measures to reduce the hazard of a rampside fuel fire.

### II. CODES AND REGULATIONS

Building Codes, where applicable, shall serve as minimum design criteria.

### III. STANDARDS

The following are representative NFPA standards to be used in conjunction with PA criteria.

A. Terminal Buildings, Satellites, Fingers, etc.

1. NFPA 407-80, Aircraft Fuel Servicing, Sections 2-11.2 and 5-12.3 limit the proximity of vent and fill points to air intake points on the building, and fueling cabinets and pits to the building, respectively.

2. NFPA 415-83, Aircraft Fueling Ramp Drainage, Section 2-1.1. limits proximity of drainage points to structures.

3. NFPA 416-83, Airport Terminal Buildings:

   a. Section 2-1.4 requires special provisions for below-grade areas to be protected from fuel and vapor penetration.

   b. Section 2-3 defines distance and protection of heating and ventilation openings on the building from points of potential fuel or vapor release.

   c. Section 2-4.2 requires exit doors discharging onto ramp be marked "EMERGENCY EXIT ONLY".

   d. Section 2-8 requires protection of window glass when potential fuel spill points are within 100'.

B. Loading Walkways

NFPA 417- Aircraft Loading Walkways

IV. PORT AUTHORITY DESIGN CRITERIA

A. Terminal Buildings, Satellites, Fingers

1. A fire geometry with a 25′ radius (as observed from NAFEC tests) shall be required around points of potential fuel spillage such as fueling hydrants, fuel tank fill connections, vent openings, catch basins, etc. See ATTACHMENT V for diagram. The exterior walls of the building shall be protected and rated according to the Building Code criteria:

   a. In N.Y. City, protection shall depend on "exterior separation", as required in Code Table 3-4;

   b. In New Jersey, protection shall depend on "fire separation", as required in BOCA Table 401.

   Exterior and fire separation shall be measured to the centerline between the building wall and fire geometry described above. (See Article 2 of the N.Y. City and BOCA Codes for definitions of exterior and fire separation).

2. See also NFPA 416, Section 2-8 requiring protection of window glass when potential fuel spill points are within 100′.

3. Doors from exit stairs or passageways opening onto apron within 85′ of potential points of fuel spillage must be protected by a full height radiation barrier.

B. Fixed Loading Walkways

1. Fixed loading bridges shall be designed as part of the terminal building.

C. Articulating Loading Walkways

1. Design shall provide a safe exit route from the aircraft for a period of at least five minutes under severe fire exposure conditions equivalent to a free-burning jet fuel spill fire in compliance with NFPA 417, Aircraft Loading Walkways. The Engineer-of-Record shall certify compliance in writing and submit the test reports as defined in NFPA 417 to demonstrate said compliance.

2. It is recommended that loading bridges be designed to prevent sudden failure (collapse, explosion or development of excessive smoke and gases) during the ten (10) minute test.

3. Compliance shall also include but not be limited to:

   a. Structural integrity of the Walkway under the fire conditions.

   b. Class A interior finish and floor coverings.

   c. Interior atmosphere (toxic products of decomposition and/or dense smoke resulting from fire), and the maximum temperature of 248 F.

   d. Component durability.

   e. Integrity of closure curtain with respect to smoke penetration through cracks and openings shall be established.

4. Structural columns as principal structural parts shall also be designed with capability to endure the fire test.

5. Windows shall not be allowed, except the minimum required by operator, which shall be protected by wired glass or automatic fire shutter.

6. Light diffusers of plastic material shall be of approved type for exits, or wired glass shall be used.

7. Walkways to be used as exits shall comply with the following:

   a. Maximum travel distance of 150'.

   b. Minimum width of 44" or the width of the aircraft door being served, whichever is larger.

   c. Maximum slope of 1:10.

   d. Handrails.

   e. Non-slip floor covering.

   f. Emergency lighting.

8. The door at terminal end shall be provided with panic hardware (NFPA), shall be rated for 1 1/2 hours and not be less than 44" or the number of units required for the walkway, whichever is larger.

9. The door opening onto the walkway shall have an electrical interlock to prevent opening until the walkway is engaged to the plane.

10. Aircraft loading walkway shall not be located over any drainage outlets. NFPA 415, Section 2-1.4.

11. For structural criteria for loading bridges see the Structural Section.

12. The electrical installation shall comply with the (stricter applicable) requirements of the National Electrical Code and the local Electrical Code, particularly with the Hazard Requirement, i.e., presence of flammable vapors from aircraft fueling, venting and storage points.

13. The hydraulic and electrical system for the bridge shall be demonstrated to be fail safe.

# Materials, Operations, & Equipment.

## Approval & Inspection

14

# MATERIALS, OPERATIONS, AND EQUIPMENT APPROVAL AND INSPECTION

## I. GENERAL

The purpose of this section is to outline:

1. The requirements for acceptance (approval) of materials, assemblies, forms, methods of construction, and equipment for the use intended.

2. The requirements for inspection of materials and assemblies and construction.

## II. CODES AND REGULATIONS

A. In New York City:
- New York City Building Code
- The Reference Standards of the Building Code
- New York City Fire Prevention Code
- N.Y. City Local Laws
- Rules of the Board of Standards & Appeals (BS&A)
- N.Y. State Labor Laws
- N.Y. State Multiple Dwelling Laws (Hotels)
- Applicable Flood Control Regulations

B. In New Jersey:
- N.J. Uniform Construction Code
- BOCA Basic Building Code
- Reference Standards of BOCA
- Barrier-Free Design
- NJAC - Title 7 - Environmental Protection Laws
- Applicable Flood Control Regulations

## III. NEW YORK CITY

A. Approval/Acceptance of Materials, Equipment, etc.

No material, assemblies, forms, method of construction, equipment, machinery and devices will be acceptable for the use intended unless:

1. Accepted by the Materials and Equipment Acceptance (MEA) division of the office of the Commissioner of the Buildings Department of N.Y. City, or

2. Approved by the N.Y. City Board of Standards and Appeals (BS&A).

Resolutions of MEA or BS&A shall be submitted for review along with other review documents. Manufacturers' or distributors' letters shall not be acceptable.

Above requirements are abstracted from N.Y. City Building Code Sections C26-106.1, 106.2, 107.1 and 107.2.

B. Inspection

1. Controlled Inspection (Code Sections C26-106.3 and 107.3).

All materials, equipment, and construction, designated for "controlled inspection" by the Code shall be inspected and/or tested to verify compliance with the Code.

Controlled inspection shall be made and witnessed by or under the direct supervision of an architect or engineer retained by the tenant and acceptable to the architect or engineer responsible for the plans. The inspecting R.A. or P.E. shall not be hired by the contractor.

All items subject to controlled inspection shall be listed on the title sheet of the plans, or the sheet immediately following (C26-110.2).

The following is a list of items subject to controlled inspection:

| | |
|---|---|
| Borings or test pits | - C26-1112.2 |
| Piles | - C26-1112.3 |
| Soil | |
| Subgrade for foundation | - C26-1112.5 |
| Controlled fill | |
| Underpinning | - C26-1112.6 |
| Concrete | - Code Tables 10-1, 10-2 |
| Prestressed concrete | |
| Precast Concrete | |
| Formwork | - C26-1904.3(b) |
| Steel | |
| Welding | - Code Table 10-2 |
| H.S. bolts | - Code Table 10-2 |
| Cable fittings | - Code Table 10-2 |
| Aluminum, welding | - Code Table 10-2 |
| Laminated wood | - Code Table 10-2 |
| Firestops | - C26-504.7(g) |
| Spray-on fireproofing | - C26-502.2(f) |
| Heating systems | - C26-1401.1(a); 1401.2(b) |
| Ventilation systems | - C26-1301.2; 1301.3 |
| Refrigeration systems | - C26-1301.4 |
| High pressure systems | |
| Chimney smoke vent | - C26-1501.1(e); 1504.1(b) |
| Elevator sheave beam reactions | |
| Structural integrity during construction operations | Dept. of Buildings, Rules. |
| Exterior walls - | - C26-105.1 |

IV. NEW JERSEY

Note:

a. The New Jersey Uniform Construction Code (NJUCC) referenced below is the updated edition dated 9-10-81.

b. The BOCA Basic Code referenced below is the 1981 edition.

A. Approval/Acceptance of Materials, Equipment, etc.

Acceptance of materials, assemblies, forms, methods of construction, equipment, etc., shall be based on authenticated reports from approved agencies indicating compliance with accepted engineering practice. (~~BOCA Section 1102.1~~) BOCA-87 Section 130, ~~1981 Appendix A~~ and Appdx A

Alternately, materials and equipment shall be tested in compliance with BOCA-87, Art. 13.

Note:

a. Approved agencies listed in Appendix A of BOCA are Factory Mutual (FM), Gypsum Association (GA), and Underwriters Laboratories (UL). PA Engineering has also accepted Board of Standards & Appeals (BS&A) and Materials and Equipment Acceptance (MEA), both of New York City, approvals, whenever they satisfy the New Jersey Code requirements.

b. Accepted engineering practice reference standards are listed in the Appendix A of BOCA.

1. Construction Materials
Construction materials shall be classified as:

a. "Controlled Materials", the strength of which materials shall conform to the specifications and methods of design of accepted engineering practice.

b. "Ordinary Materials", the use of which shall be as prescribed in BOCA, Appendix D, (in general the permitted strength of ordinary materials will be 10% below the standards of accepted engineering practice, BOCA Appendix A).

See BOCA Definitions and Sections 919.1 and 919.2.

ARTICLE 22

2. Strength test for glass: see BOCA 1102.2.1 and 1301.5.

3. Tests of service equipment and devices: see BOCA 1102.6 and the related subcodes.

4. Fire tests: see BOCA 1102.7 and 1403.0.

5. Flame spread and flame resistance (interior finishes, etc.): see BOCA 1404.0.

Above documents shall be submitted for review along with other review documents. Manufacturers' or distributors' letters shall not be acceptable.

B. Inspection

Construction Control
As per NJUCC 5:23-2.21(c):

1. The tenant shall assign a "responsible person in charge of the work" (RPIC), who shall be responsible for:

   a. Review and approval of all documents pertaining to the construction phase;

   b. Verification of all controlled materials;

   c. Special inspection of critical construction components (see list below);

   d. Necessary services to determine that the work is proceeding according to the approved documents.

   At the completion of work, the RPIC shall submit to the PA a report as to the satisfactory completion of the project, including a list of deviations from the approved documents.

2. The contractor shall, at the completion of the construction, certify that such has been done in substantial accord with the approved documents, with all pertinent deviations specifically noted.

The following is a comprehensive list referred to in the requirement for "special inspection of critical construction components", stated in item B.1(c) above:

Foundations
- Boring operations.....Boca, Sect. 1003.1
- Subgrade for foundations
- Controlled fill
- Piling (installation, testing, cut-off and tip elevations).....Boca, Sect. 1013.12
- Support of adjacent properties
- Underpinning
- Foundations and walls up to grade prior to backfilling

Structure
    Structural framing and connections

Plumbing
    Underground services
    Rough piping
    Water services
    Sewer
    Septic service
    Storm drains

Electrical
    Rough wiring
    Panels and service installation
    Insulation installation

Installation of
    Finished materials (incl. plastering, BOCA Section ~~118.2~~ 1604.3 1987)
    Ceilings

Mechanical equipment systems
Heat producing systems

Inspection requirements of the subcodes such as BOCA Basic Building Code, BOCA Basic Mechanical Code, National Plumbing Code, National Electrical Code, BOCA Basic Energy Conservation Code, Barrier-Free Design, etc., which have not been listed above.

ATTACHMENT I

SPECIFICATIONS GOVERNING THE FLAMMABILITY OF CARPETS

1. These specifications apply to carpets and carpet assemblies when used only as a floor covering. Carpeting assemblies include the carpet, its underlay, and adhesives which when tested as a composite shall be representative of the proposed installation.

2. Carpet and carpeting assemblies shall not be installed in stairways designed for exiting to meet building code requirements.

3. All carpets and underlayments shall pass the Methanine Pill Test. Department of Commerce Standard FF1-70.

4. Carpet and carpeting assemblies shall be tested by the Standard Test Method for Critical Radiant Flux of Floor Covering Systems Using a Radiant Heat Energy Source. ASTM E648-78. The time frame for this procedure may be limited to a 15 minute exposure.

   a) Carpet and carpeting assemblies representative of the actual installation on floors of corridors, exitways (except exit stairways), and exit passageways shall have a minimum critical radiant flux of 0.5 watts per square centimeter (W/cm2).

   b) Carpet and carpeting assemblies representative of the actual installation on floors of general areas shall have a minimum critical radiant flux of 0.4 W/cm2.

5. Carpet and carpeting assemblies shall be tested using the Standard Test Method for Specific Optical Density of Smoke Generated by Solid Materials ASTM E662-79.

   The smoke developed rating in either the flaming or non-flaming mode shall not exceed 300 within the first 4 minutes of the test.

6. The manufacturer of the carpet and carpeting assemblies is required to submit a certification by a recognized independent laboratory showing the complete test data results prior to final acceptance.

   The certification shall state that the material is treated for fire resistance and shall indicate the service life of the treatment or that the material is inherently fire resistant by virtue of its construction, chemical properties and/or composition. Materials which are not inherently fire resistant may be used only when the certified fire resistant service life exceeds that of the planned service life of the carpet and carpeting assemblies with consideration being given to cleaning traffic and other conditions of use which may affect the treatment.

SPECIFICATIONS GOVERNING THE FLAMMABILITY OF DRAPERY AND CURTAIN MATERIALS

1. All drapery and curtain materials, including linings, shall be subject to the vertical flame test as required by Federal Aviation Administration (FAA) Regulation 25.853 (b) and Appendix F dated May 1, 1972.

   The test method requries that the flame shall be applied for 12 seconds and then removed, that the average char length shall not exceed 8 inches, that the average flame time after removal of the flame source shall not exceed 15 seconds, and that drippings from the test specimen shall not continue to flame for more than 5 seconds after falling.

2. The manufacturer of the finished item shall submit written certification for each component fabric of the completed items as follows:

   a) If the material contains 100% fibers that are inherently flame resistant by virtue of the physical properties of the untreated fiber, a written certification by a recognized independent testing labortary, attesting to the permanent flame resistant properties of all the fibers within, shall be submitted to the Port Authority.

   b) If the material contains fibers which are not inherently flame resistant in the untreated state, a written certification by a recognized independent testing laboratory shall be submitted to the Port Authority, attesting that the treated materials have maintained their flame resistant properties, as determined by the burn test in Section 1, after 5 washings and/or dry cleanings. The washing test procedure shall be performed as defined by the Technical Manual of the American Association of Textile Chemists and Colorists (AATCC) Test Method 124-1978 using the wash temperature of 120o $\pm$ 5Fo and the "Tumble Dry" procedure. The dry cleaning test procedure sall be performed by subjecting the material to dry cleaning in a "Coin-Op" machine as manufactured by Norge or Westinghouse or an equal machine. The size sample of material and the machine size are to be commensurable to each other. When necessary, dummy pieces of material shall be added to the test specimens to make up a load equal to the machine rating.

SPECIFICATIONS GOVERNING THE FLAMMABILITY OF UPHOLSTERY MATERIAL AND PLASTIC FURNITURE

1. All upholstery materials, including covering, interliner, lining, webbing, cushioning, and padding shall be subject to the vertical flame test as required by Federal Aviation Administration (FAA) Regulation, Section 25.853 (b) and Appendix F dated May 1, 1972.

   The test method requires that the flame be applied for 12 seconds and then removed, that the average burn length shall not exceed 8 inches, that the average flame time after removal of the flame source shall not exceed 15 seconds and that drippings from the test specimen shall not continue to flame for more than an average of 5 seconds after falling.

   Test samples subject to the vertical test shall be tested using the thickness of the material as used in the finished product; except that, the maximum thickness of a test sample shall be one-half inch (1/2") in cases where the final product material exceeds this thickness.

2. Padding that exceeds one-half inch (1/2") thickness and all cushioning in addition to meeting the requirements of Section 1, shall be tested in accordance with the Standard Test Method for Surface Flammability of Materials Using a Radiant Heat Energy Source-ASTM E162-78. Wire mesh screen and aluminum foil shall be used as indicated in Section 5.8.1 of this standard test method.

   a) Padding and cushioning with a flame propagation index not exceeding 100 is acceptable for use with any external covering that meets the requirements of section 1 of this specification.

   b) Padding and cushioning with a flame propagation index exceeding 100 may be covered with materials or interliners complying with Section 1 of this specification. However, the final assembly of these materials which make up the cushion, arm rest, or other parts of the furniture, shall be subject as a composite unit to Standard Test Method ASTM E162-78. Composite assemblies with a flame spread index not exceeding 100 will be acceptable.

3. All self-supporting plastic materials shall be subject to the vertical flame test as required by FAA regulation 25.853 (a) and Appendix F dated May 1, 1972. The test method requires that the flame be applied for 60 seconds and then removed that the average burn length shall not exceed 6 inches, that the average flame time after removal of the flame source shall not exceed 15 seconds, and that drippings from the test specimen shall not continue to flame for more than an average of 3 seconds after falling.

4. The thickness of the materials and of the composite assemblies tested under SECTIONS 2 and 3 shall be the same as the thickness used in the finished item. Certification submitted by the manufacturer shall indicate the thickness of the materials as tested.

5. The manufacturer of the finished item shall submit a certification by a recognized, independent, testing laboratory of the results of tests specified above and of the service life of the flame retardency of a treated material or a certification that the flammability characteristics of the material are inherent therein by virtue of the chemical properties of the material. Treated materials may be used only when the certified flame retardant service life exceeds that of the planned service life of the finished item.

SPECIFICATIONS GOVERNING THE FLAMMABILITY OF PLASTIC LAMINATE AND WOOD VENEER FURNITURE

1. Tests and Criteria.

   a) Flame spread indices for this specification shall be determined by either ASTM-E-84-79a or ASTM-E162-78. Flame spread indices shall not exceed 25.

   b) The vertical flame test shall be performed in accordance with Federal-Aviation Administration (FAA) Regualtion, Section 25.853 (b) and appendix F dated May 1, 1972. This test method requires that the flame be applied for 12 seconds and then removed, that the average burn length shall not exceed 8 inches, that the average flame time after removal of the flame source shall not exceed 15 seconds, and that drippings from the test specimen shall not continue to flame for more than 5 seconds after falling.

2. Free Standing Office Partitions.

   a) All core and/or structural materials shall be tested and meet the requirements specified in 1.a.

   b) All insulation and covering materials shall be tested and meet the requirements specified in 1.b.

3. Desks, Tables, Credenzas, Bookscases, etc.

   a) All core and/or structural materials shall be tested and meet the requirements specified in 1.a.

   b) Plastic laminate or wood veneer layer materials having a thickness not greater than 1/28 inch shall be tested and meet the requirements specified in 1.b.

   c) Plastic laminates or veener layer materials having a thickness greater than 1/28 inch shall be subject to the vertical flame test FAA Regulation. Section 25.853 (a) or (b) and appendix F dated May 1, 1972, as determined by the Risk Management Division.

   d) The application of intumescent coatings to achieve fire resistance shall be reviewed by the Risk Management Division.

4. Certification.

   The supplier of the finished item shall submit a certification and test data by a recognized, independent testing laboratory of the results of the tests specified above. The certification and tests shall cover the materials supplied in the finished product. Proof of use of U.L. labeled products meeting the specified flammability criteria will be acceptable in lieu of the certification.

ATTACHMENT II

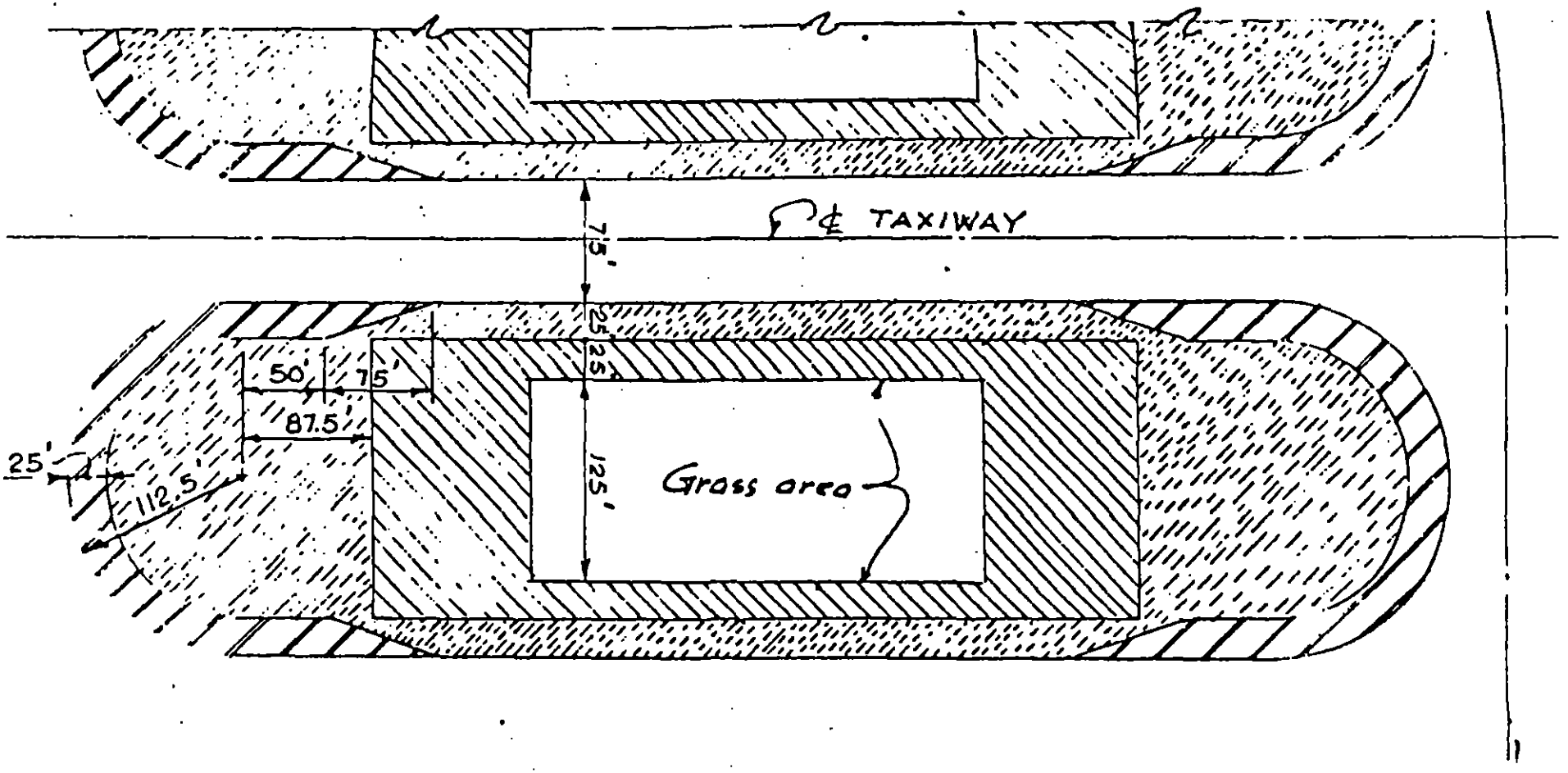


HEAVY SHOULDER - (4" AC, 10" Plant Mix, 10" Dense Graded Agg. Base Course)

NORMAL SHOULDER & HEAVY EROSION (3" AC, 4" Plant Mix, 6" D.G. A.B.C.)

LIGHT EROSION (2" AC, 4" Plant Mix, 6" D.G.A.B.C.)

# ADDITIONAL TAXIWAY PAVING

ATTACHMENT III

REQUIREMENTS FOR PROTECTION OF STEEL OR CAST IRON UNDERGROUND PIPE

REM - RELOCATION OR ENCASEMENT MANDATORY
STS - SUBJECT TO STUDY
NER - NO ENCASEMENT REQUIRED

R - RELOCATE
E - ENCASEMENT REQUIRED

| | NEW | ESISTING |
|---|---|---|
| 1. Railroads | REM | STS<br>REM |
| 2. Highways - Terminal Building frontage fits in this category | REM | REM |
| 3. Local Streets | NER | NER |
| 4. Under Buildings | | |
| a. Spread footings | R | R |
| b. Piles - Framed slab | | |
| (1) Pipe < 12" dia. | REM | R |
| (2) > 12" dia. | REM | STS |
| c. Piles - Slab on grade | | |
| (1) L.L. > 200 PSF | | |
| (a) Pipe > 12" dia. | R | R |
| (b) Pipe < 12" dia. | STS | STS<br>(R or E) |
| (2) L.L. < 200 PSF | | |
| (a) Pipe > 12" dia. | STS | STS<br>(E) |
| (b) Pipe < 12" dia. | NER | NER |
| d. Floor tied | STS | STS |
| 5. Near building foundations | | |
| 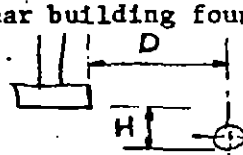  | | |
| a. Where $D > 2H + 2d^2$ | NER | NER |
| b. Where $D < 2H + 2d^2$ | | |
| (1) Spread footings | R | R |
| (2) Piles | | |
| d > 12" dia. | E | E |
| d < 12" dia. | REM | REM |
| 6. 747 Loading | | |
| a. Runways | REM | REM |
| b. Taxiways | | |
| (1) PAF | REM | REM |
| (2) Local | REM | REM |
| c. Taxiway Stubs | STS | STS |
| d. Aprons | | |
| (1) Poor Pavement { < 13" CONCRETE. < 28" FLEX. PVMT. | STS | STS |
| (2) Good cover | NER | NER |
| (3) Less than 6' cover | STS | STS |
| e. Gate positions | REM | REM |

ATTACHMENT IV

NEW YORK CITY MUNICIPAL FIRE ALARM

A fire alarm box shall be furnished and installed as shown on the Contract Drawings. It shall be of the automatic grounding succession type, similar and equal to that manufactured by the Brown Brothers Manufacturing Company. The front of the outer shell door shall bear a number plate agreeing with the cut of the code wheel. The box shall be mounted on a pedestal. Mechanism, pedestal, mechanism housing, subbase, terminal box, and gasket shall be obtained by the Contractor from the Fire Department Storehouse, 595 Union Street, Brooklyn, New York.

A certified check in an amount to be determined by the Fire Department, made payable to the Director of Finance, New York City shall be sent to the Bureau of Fire Communications, 110 Church Street, 7th Floor, New York, New York 10007, prior to pick up of the material from the Fire Department Storehouse, 595 Union Street, Brooklyn, New York.

Before installation, the fire alarm box shall be sent to the central office of the New York City Bureau of Fire Communications for test and inspection.

A ground rod shall be installed in an approved manner and the ground connection thereto shall be accessible to inspection and test. Maximum resistance to ground at the ground rod shall be 25 ohms.

Wire connections at the fire alarm and terminal box, and cuts and splices of live cables in the existing manhole, will be made by the Contractor under the supervision of the N.Y.C.F.D.

Mount New York City fire alarm box on top of N.Y.C.F.D. "O'Brien" type pedestal.

The Contractor shall protect and maintain the existing fire alarm system and all workmanship, equipment and materials used in connection with the New York City Fire Alarm System shall comply with the requirements of the Bureau of Fire Communications, N.Y.C.F.D.

New York City Fire Department will supervise all terminations and splices.

Contractor shall notify the N.Y.C.F.D. Bureau of Fire Communications 48 hours prior to commencement of work on Fire Alarm System (Telephone No. (212) 566-1373 or 1374).

N.Y.C.F.D. Signal Cable Spec.
City of N.Y. Fire Department Fire Alarm Cable
City of New York, Department of Purchase
Cable Specification #12-C-9: 61T, Tentative Standard
Fire Alarm Signal Cable; Polyethylene Insulated,
Polyvinyl chloride jacketed

Also attached please find Sketches SK-FA-1, and -2.

In order for the P.A. to obtain the N.Y.C. Fire Department approval of the proposed fire alarm installation, three sets of the following information are required to be sent to the P.A., via the tenant's Alteration Application:

1. A plot plan of the building showing the exact location of all the fire alarm boxes and their relationship to site conditions, i.e. roads, sidewalk, fences, island, building exists, etc.

2. Details of fire alarm box, pedestal, foundation, cable and duct installation, etc.

3. Specifications for fire alarm equipment, cable installation procedures, etc.

4. The above may be submitted in the form of contract drawings, sketches, and formal specifications, for proper transmittal by P.A. to the NYC Fire Department.

Code wheel designations for the proprietary fire protection system shall be obtained from the P.A. Manager of Plant & Structures at the JFKIA.

Code wheel designations for the N.Y.C. fire alarm boxes shall be obtained from the N.Y.C. Fire Department.

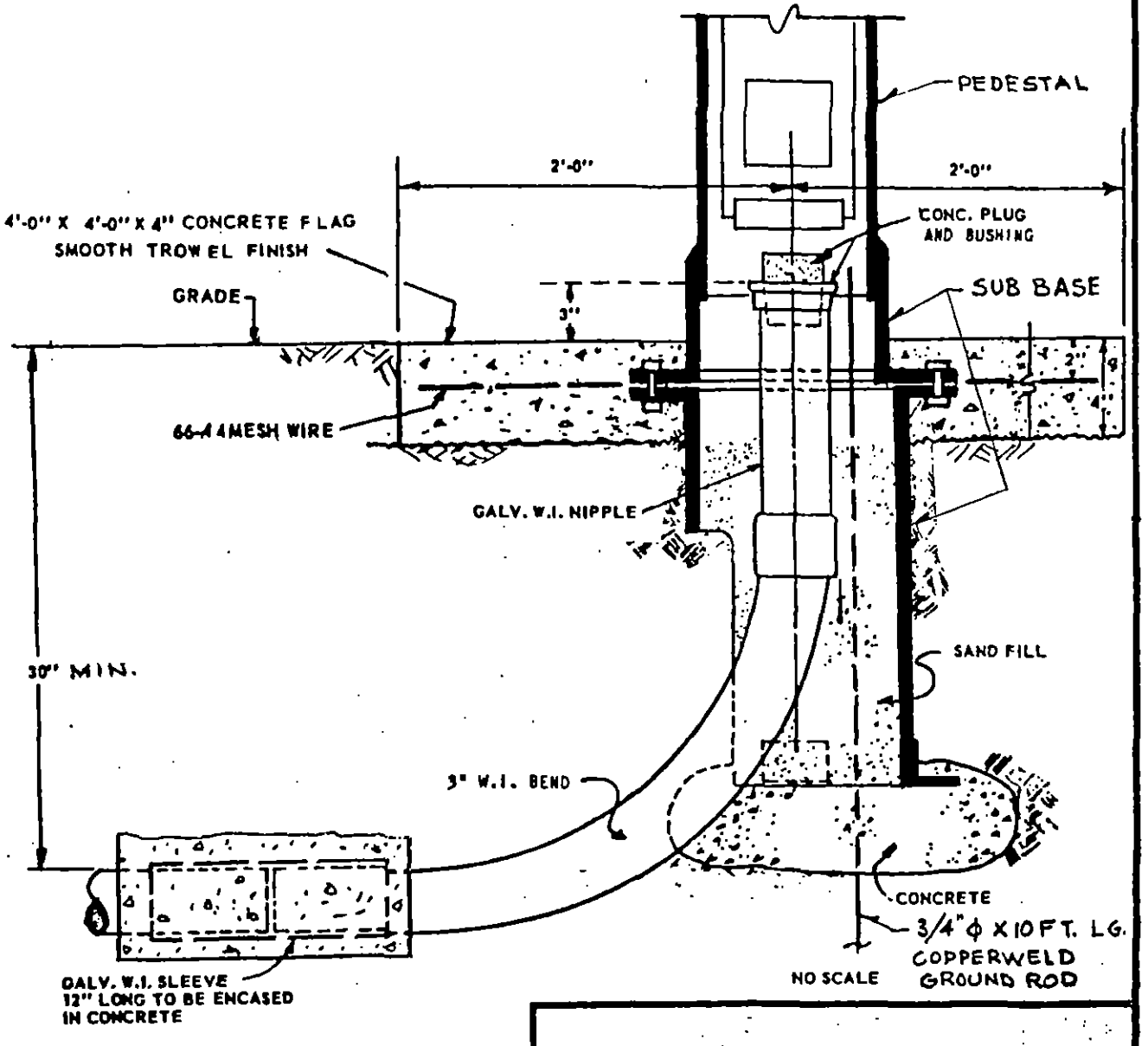


PEDESTAL BASE
FOR F.A. POST IN FLAG
(N.Y.C.F.D.) SK-FA-1

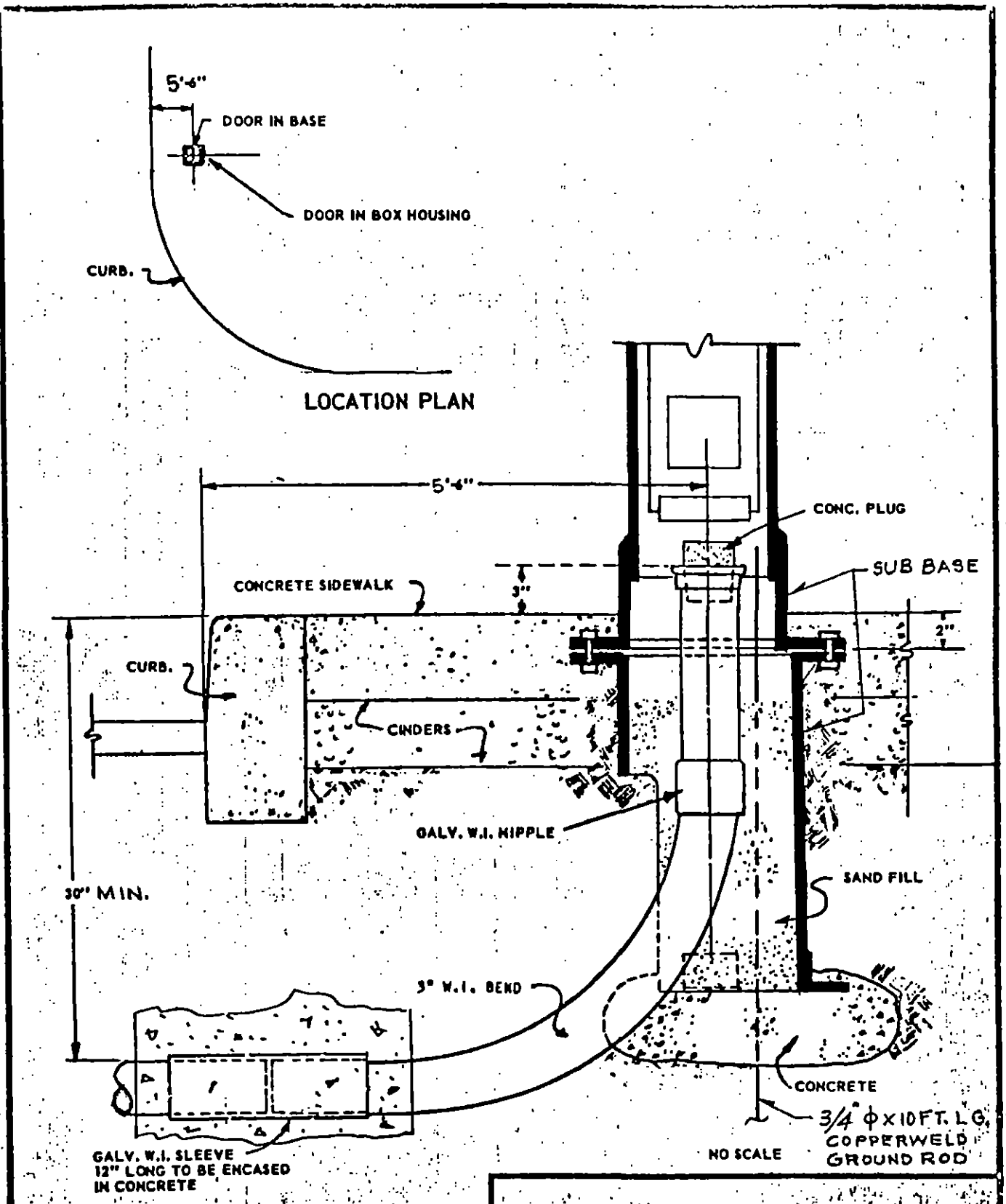


PEDESTAL BASE
FOR F.A. POST IN SIDEWALK
(N.Y.C.F.D.) SK-FA-2

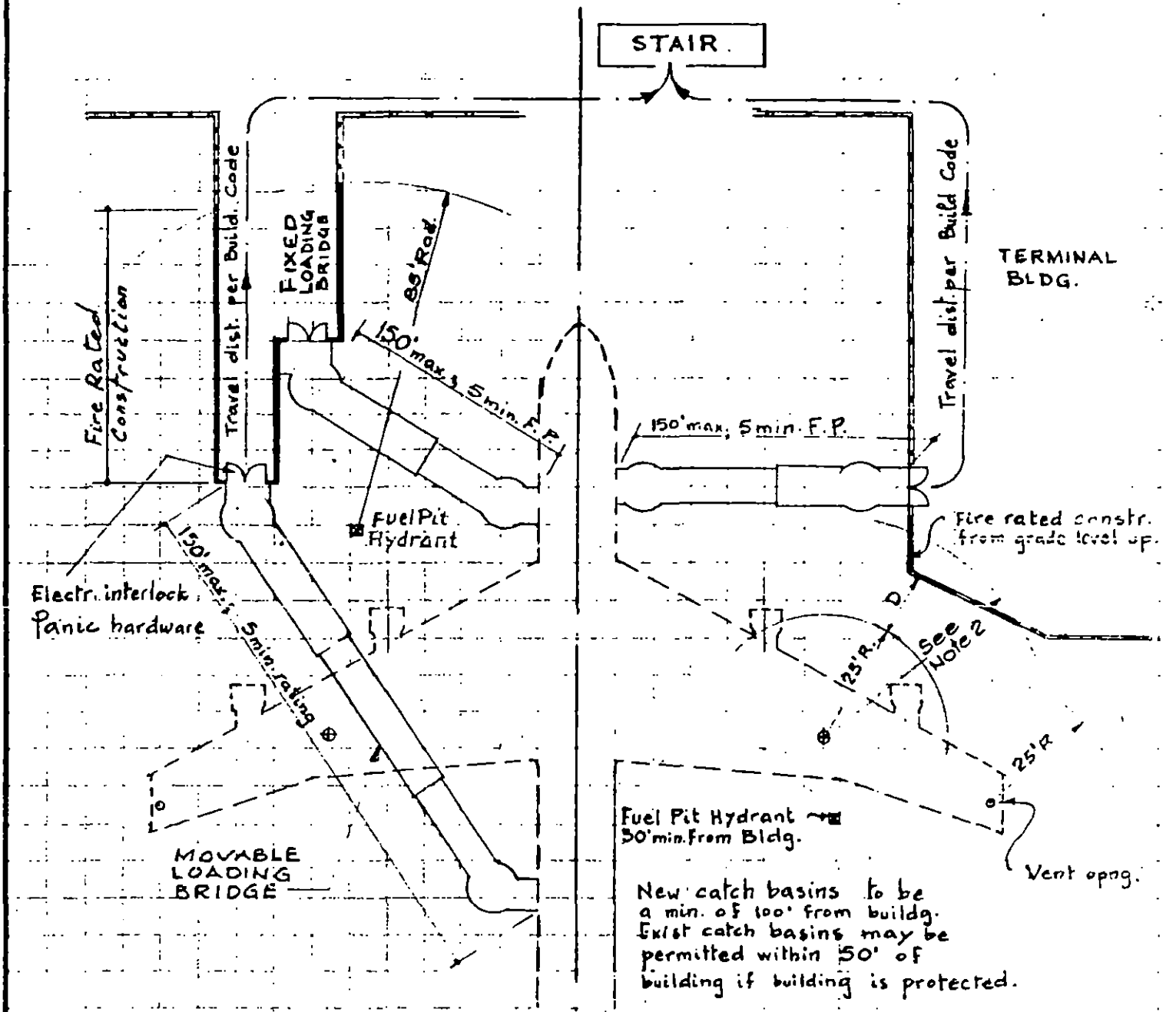


Notes:

1. POTENTIAL FIRE GEOMETRY (as interpolated from NAFEC tests) – 25' radius from points of potential fuel spillage, such as fueling hydrants, fuel tank fill connections, vent openings (NFPA 416-2-8.1).

2. Exterior walls, and openings therein, shall have rating and protection as per Table 3-4 of N.Y.C. Building Code or Table 401 of BOCA for N.J.
   It is strongly recommended that all walls have a minimum of 3' high spandrel fire barrier.

3. Radiation barriers shall be provided at all exit openings within 85 ft.

E3

PA 3E
9-75

THE PORT AUTHORITY OF NY & NJ

To F. Schink Room No 72S

Varoujan Dovletian / Room 43E / Ext. 4203

Date 2/15/85

Re: PVC CABLES AND CONDUITS; ARMORED CABLES

This is to reiterate our understanding of the present policy regarding the subject cables and conduits.

1. Neither PVC cables nor conduits shall be permitted in building interiors.

   Exception: PVC cables in metallic conduits shall be permitted in storage areas having low human occupancy if not prohibited by Code.

2. Armored cable shall not be permitted.

V. Dovletian

Varoujan Dovletian, P.E.
Supervising Engineer
Tenant Construction Review Unit

AR/das

cc: M. Poliacof

(61)

# PVC CABLES & CONDUITS

a. PVC cables are thermoplastic cables commonly having code designations of Type T (TW, THW, ~~THWN~~, etc)

b. Code requirements must be met as a minimum.

c. Building Cables: PVC is not to be used ~~Other~~ cables (other than PVC insulated such as cross-linked polyethylene (XHHW), EPR, polyolefin, or Teflon type cables are to be used in metal raceways.

d. Communication Cables:

i. In conduit or raceways low smoke (non-PVC) jackets are to be used.

ii. Teflon type materials may be run exposed where specifically permitted by the drawings.

iii. Only under conditions approved in advance by the Port Authority, where low smoke jackets are not available, may PVC jacketed cables in metal raceway or enclosure be utilized. In this case the fire seals, such as palusol, and smoke seals consisting of approved mouldable material shall be provided at penetrations of the cables from the metal raceway or metal enclosure.

iv. Raised floor systems:

~~all~~ under floor.

a) Teflon type cables may be run exposed. A smoke detection system shall be provided.

b) For other than Teflon type cables, smoke detection and fire extinguishing systems shall be provided, and

e. Lighting ballast leads which are normally thermoplastic wire, are acceptable. The P.A. Resident Engineer may also permit the use of short lengths and small quantities of thermoplastic wire where such leads are furnished as a permanent part of a device.

f. PVC conduits shall not be used in buildings

THE PORT OF
RECEIVED
AUG 2 5 1994
OFFICE OF THE
RESIDENT ENGINEER

(E1)

# PVC CABLES & CONDUITS

A. PVC cables are thermoplastic cables commonly having code designations of Type T (TW, THW, THWN, etc)

B. Code requirements must be met as a minimum.

B1. Building Cables: PVC is not to be used. ~~Other~~ cables other than PVC insulated such as cross-linked polyethylene (XHHW), EPR, polyolefin, or Teflon type cables are to be used, in metal raceways.

NDGNT

B2. Communication Cables:

1. In conduit or raceways low smoke (non-PVC) jackets are to be used.

2. Teflon type materials may be run exposed where specifically permitted by the drawings.

3. Only under conditions approved in advance by the Port Authority, where low smoke jackets are not available, may PVC jacketed cables in metal raceway or enclosure be utilized. In this case the fire seals, such as palusol, and smoke seals consisting of approved mouldable material shall be provided at penetrations of the cables from the metal raceway or metal enclosure.

4. Raised floor systems:

   a) Teflon type cables may be run exposed ~~all other cables~~ under floor. A smoke detection system shall be provided.

   b) For other than Teflon type cables, smoke detection and fire extinguishing systems shall be provided, and

C. Lighting ballast leads which are normally thermoplastic wire, are acceptable. The P.A. Resident Engineer may also permit the use of short lengths and small quantities of thermoplastic wire where such leads are furnished as a permanent part of a device.

D. PVC conduits shall not be used in buildings

THE PORT OF
RECEIVED
AUG 29 1964
...GE OF THE
... ENGINEER

EC4

**THE PORT AUTHORITY OF NY & NJ** Memorandum

To: Robert G. Goode, Manager, Port Planning
From: Frank E. Schink
Date: July 1, 1985
Subject: PVC ELECTRICAL INSTALLATIONS

Reference: Memo: R. G. Goode to F.E. Schink, dated June 25, 1985

Copy To: A. Cracchiolo, D. Hahn, D. Hall, G. Hin, B. O'Malley

| Refer To | Date | Noted By | Date |
|---|---|---|---|
| | | | |
| | | | |
| | | | |
| | | | |
| Return To | | File | |

The approach implied in your memo of June 25, 1985 does not conform to the Port Authority's position on the use of PVC insulated cable as defined in my memo dated May 25, 1985. In addition, the discussion you refer to between yourself and Mr. Hahn, Assistant Chief Engineer for Design and Research, addressed a specific instance of tenant construction for which you requested a waiver of this policy. The discussion did not provide for an agreement to exempt any other Ports construction from this Engineering Department standard.

The May 25, 1985 memo describes the Policy on electrical PVC materials which apply to all Port Authority installations.

F. E. Schink

Frank E. Schink, P.E.
Chief Electrical Engineer

FES/kv

EC

**THE PORT AUTHORITY OF NY & NJ** Memorandum

To: Mr. D. Hahn, Asst. Chief Engineer for Design & Research
From: Varoujan Dovletian
Date: September 5, 1984
Subject: POWER DENSITY RADIATED BY WORLD TRADE CENTER TRANSMITTERS

Reference: Verbal orders, W. Toth to V. Dovletian, of 8/30/84

Copy To: D. Goldberg, R. Linn

| Refer To | Date | Noted By | Date |
|---|---|---|---|
| | | | |
| | | | |
| | | | |
| | | | |
| | | | |
| Return To | | File | |

The Tenant Construction Review Unit will not review alteration applications for transmitters or antennas in the World Trade Center with regard to radiated power density, per the referenced orders of that facility.

V. Dovletian

Varoujan Dovletian, PE
Supervising Engineer
Tenant Construction Review Unit

AR/das

PA 80A
3-80

A-744

# PORT AUTHORITY ELECTRICAL ENGINEERING DESIGN COURSE

## INTRODUCTION TO THE ELECTRICAL CODES

by Alvin S. Rohssler, P.E.

I. Why have electrical codes?

- A. "Guidelines ... with the primary purpose of protecting those who use electricity." (Preface, NYC Electrical Code.)
- B. Minimum standards of accepted design practice. (See, for example, NYC Building Code C26-100.2.)

II. Which codes apply to my design?

- A. New York City.
  1. Electrical Code of the City of New York.
  2. National Electrical Code (by PA policy).
  3. Building Code of the City of New York.
  4. New York State Energy Conservation Construction Code.
- B. New Jersey: NJ Uniform Construction Code.
  1. Supersedes local codes; adopted in 1975.
  2. Electrical subcode: National Electrical Code.
  3. Building subcode: BOCA Basic/National Building Code/1984 (w/yearly supplement).
  4. Energy subcode: IES Standard EMS-1, "Lighting Power Budget Determination Procedure".

III. How do <u>building</u> codes affect electrical design?

- A. Exit (egress) lighting. NYC Bldg Code C26-605.0, BOCA 824.0 (general case); NYC Bldg Code C26-801.18 (places of assembly).
- B. Exit signs. NYC Bldg Code C26-606.0, BOCA 823.0.
- C. Emergency power. NYC Bldg Code C26-610.0; sections on exit lights and signs, fire alarms (RS 17-3); for NJ, see NEC.
- D. Luminous ceilings. NYC Bldg Code C26-504.12(b)2, by cross-reference to NYC Elec Code P30-120.0c; BOCA 2306.0.
- E. Fire alarms. NYC Bldg Code C26-1704.0, RS 17-3 et seq.; BOCA 1716.0 et seq.

F. Occupancy classification, NYC Bldg Code Article 3 and PCCA Article 3 (from Architect), dictates some of the design in the above building code references.

IV. Where should a code analysis begin?

A. Power distribution: One-line diagram.

1. Source capacity.

2. Connected and demand loads.

3. Feeder sizes.

4. Overcurrent protection.

5. Short-circuit current available at each level.

6. Raceway fill.

7. Grounding.

B. Physical requirements.

1. Occupancy classification (from Architect).

2. Hazardous locations (from electrical codes).

3. Number of outlets on a given branch circuit at a given voltage.

4. Guarding, spacing.

5. PS&A, NEA, test laboratory certification.

V. References.

A. Back of NEC: Worked-out examples.

B. NEC Handbook (NFPA).

C. NEC Handbook by McPartland (McGraw-Hill).

D. "Wiring Simplified" by Richter and Schwan (at The Pushcart).

1/29/86

67

**THE PORT AUTHORITY**

THE PORT AUTHORITY OF N.Y. & N.J.
TE... ...ROUTION REVIEW UNIT
RECEIVED
MAR 19 1986

THE PORT AUTHORITY OF NY & NJ
OFFICE OF ENGINEER OF DESIGN
INFRASTRUCTURE
MAR 10 1986
RECEIVED
NOTED:
REFERRED TO:

March 3, 1986
NOTED
REFERRED TO

| COPY TO | |
|---|---|
| AGC | |
| LL | |
| AN | |
| VAD | |
| HR | |
| | |
| PF | |
| JH | |
| HR | |
| IR | |
| VS | |
| HC | |
| MR | |
| AT | |
| JB | |
| M. Palicof | |
| | |
| FILE | |
| SI | |
| ENRG | |
| TCR | |
| PROG | |
| PROJ | |
| IA | |
| GEN | |
| | |
| RETURN | |
| POST | |

Mr. C. Richard Nelson, II
Manager, Project Development
Nissho Iwai American Corporation
1211 Avenue of the Americas
New York, New York 10036

SUBJECT: ELECTRICAL INSTALLATION AT THE YONKERS INDUSTRIAL PARK - BUILDING NO.9

Dear Mr. Nelson:

As a follow-up to my letter to you of February 21, 1986, and based on our phone conversation on February 28, 1986, I am providing you with the following guidelines for the installation of wire and cable in Building No. 9 as part of your tenant alteration work:

1. If PVC coated wire is utilized, it should be installed in metal conduit;

2. If interlocked armored cable is used ( with or without PVC), it should be used only where physical damage is not possible, must be installed in accordance with code requirements and details of the proposed installation must be submitted to the Port Authority for review and approval.

Please acknowlege your understanding of the above and your acceptance of the guidelines outlined by signing below.

Sincerely,

Phil LaRocco
Director of Economic Development

CONCURRENCE: C. Richard Nelson II
Manager, Project Development
Nissho Iwai American Corporation

bcc: A. Cracchicola, E. Daly, J. Doherty, F. Garcia, A. Giordano, L. Halley, R. Monti, F. Schink,

(E7)

BUCKSLIP

To: Michael Poliacof, Senior Engineer
From: Achille A. Niro
Date: November 2, 1987
Subject: GROUND-FAULT PROTECTION OF RECEPTACLES NEAR RUNNING WATER

Copy to: A. Coras, V. Dovletian, A. Rohssler

Ground-fault protection of receptacles near running water is required for the World Trade Center, per the Tenant Construction Review Manual. However, since the other Line Departments have not agreed to such protection, and since it is not a specific code requirement, this provision will be enforced for the WTC only. If this is not agreeable to the Electrical Staff, please forward a policy of statement on ground-fault protection that will apply to all Line Departments.

Achille A. Niro, P.E.
Engineer of Projects
Tenant Construction Review Unit

(58)

THE PORT AUTHORITY OF NEW YORK AND NEW JERSEY

MEMORANDUM

To: All Division Managers
From: Arthur P. Coras
Date: August 17, 1987
Subject: PORT AUTHORITY POLICY ON PVC WIRING AND CONDUIT

Copy to: D. Hahn

During the past year considerable discussions have taken place concerning the Port Authority's policy on the use of PVC insulated wiring and conduits in Port Authority and tenant buildings.

After considerable research and technical evaluation the attached policy on PVC insultated wiring and conduits was recommended by the Engineering Department and approved by the Executive Director for all Port Authority and tenant construction.

It is requested your respective staff, tenants, consultants etc. be advised of this policy and that it be applied immediately to all Port Authority and tenant construction.

Arthur P. Coras, P.E.
Engineer of Design
Infrastructure Engineering

APC/dm
att.

THE PORT AUTHORITY OF NEW YORK AND NEW JERSEY

MEMORANDUM

To: Joseph L. Vanacore, Asst. Executive Director/Capital Programs
From: R.M. Monti
Date: July 23, 1987
Subject: POLICY ON THE USE OF PVC INSULATED WIRING AND CONDUITS

Copy: R. Aaronson, A. Barber, P. Falvey, S. Frigand, L. Gambaccini, C. Hirsch, R. Kelly, J. Kirk, P. LaRocco K. MacKay, H. O'Neill, D. Plavin, V. Strom

In attempting to maintain the highest possible level of safety and integrity, the Engineering Department has prohibited the use of PVC insulated wiring and conduits, within buildings, for Port Authority designed and constructed projects for over 20 years. I recommend that this policy include all construction on Port Authority property and construction financed in whole or part by the Port Authority.

The primary concern with these products has been their physical limitations at extreme temperature and under pressure. At low temperature exposures, below 32 degrees F, PVC becomes brittle, while when exposed to high temperatures, over 104 degrees F, it is subject to deformation. PVC is also subject to deformation due to pressure during typical installation procedures at normal temperatures. Because of the loss of these physical properties, the insulation of the conductor may be damaged when installed in conduit. As a result, the conductor may be subject to premature electrical faults, which can cause electrical system malfunctions, interruption of service and ultimately loss of system reliability.

Given these physical disadvantages and in view of the fact that alternate products are readily available, PVC insulated wiring and conduits are not to be used within buildings in Port Authority and Tenant construction installations. The economic impact of this policy may be approximately 5% increase in the cost of the electrical wiring material. When evaluated on a total project basis, the cost is not significant compared with the potential benefits derived.

If it is determined that conformance to this policy is not possible, exceptions may be considered. Such exceptions shall be permitted only if the Line Department Director, who proposes such a course of action, obtains the approval of the Chief Engineer, General Counsel, and the Assistant Executive Director/Capital Programs.

RECOMMENDED: _____
R.M. Monti, Director of Engineering & Chief Engineer

CONCURRED: _____
J.L. Vanacore, Asst. Executive Director/Capital Programs

APPROVED: _____
S. Berger, Executive Director

(59)

**THE PORT AUTHORITY NY & NJ**

**MEMORANDUM**

TO: Arthur P. Coras, F. Schink
FROM: Robert J. Linn
DATE: December 19, 1988
SUBJECT: THE LEGAL CENTER - PVC COMMUNICATION WIRING
REF:

COPY TO: E. Boland, P. Cooper, R. DiChiara, R. Muessig, L. Sanchez
A. Vaccaro, R. Wegel

Please advise if there are any objections at this time on the use of communication riser cable with PVC jacketing for The Legal Center.

The attached letter instructs New Jersey Bell to follow both the 1987 BOCA Code and the NFPA 70-1987 National Electric Code. Neither code excludes the use of PVC covering communication cable.

Robert J. Linn
Deputy Director for
Physical Facilities
World Trade & Economic Development

/bf
att.

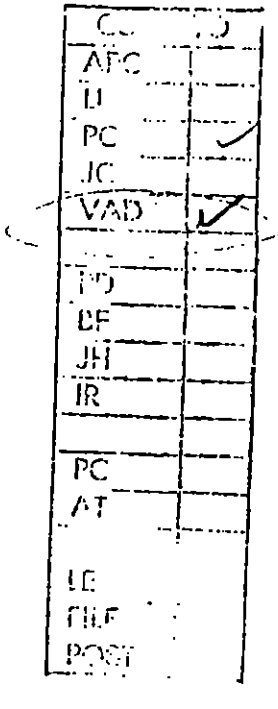


THE PORT AUTHORITY OF NY & NJ
QUALITY ASSURANCE DIV.
ENGINEERING DEPT.

DEC 27 1988

RECEIVED

NOTED: _____

REFERRED TO: _____

**THE PORT AUTHORITY** OF NY & NJ

World Trade & Economic Development Department
The Legal Center
One World Trade Center, 74S
New York, N Y 10048

D R A F T

December 9, 1988

Mr. H. T. Mason, Engineer-CEA Newark
New Jersey Bell
281 Washington Street - 2nd floor
Newark, New Jersey 07102

Re: The Legal Center - Policy On Use Of PVC Insulated Telephone Riser Cables

Dear Mr. Mason:

In response to your inquiry to me on the above subject, please be advised that current Port Authority policy with regard to The Legal Center requires that communications cable comply with those sections of the 1987 *BOCA Code and the NFPA 70-1987, National Electric Code covering* communications. If the cable you intend to use complies with the applicable article and section of the code, then it will be acceptable to the Port Authority for use on this project.

The Port Authority will require that New Jersey Bell provide certification that your cable meets the code prior to its cable *installation at The Legal Center. Please send this information to the* following:

The Port Authority of New York and New Jersey
World Trade & Economic Development
Construction Division
844 McCarter Highway - 3rd floor
Newark, New Jersey 07102

Attention: Mr. Edgar J. Boland, Resident Engineer
The Legal Center

Please call me if you have any questions on the above.

Sincerely yours,

Roger A. Muessig
Assistant Manager
The Legal Center

/bf
enc.

cc: Messrs. Paul Cooper, Engineering Dept.
Robert DiChiara, General Manager
Edgar Boland, Resident Engineer
Anthony Vaccaro, Construction Manager
Frank Schink, Chief Electrical Engineer



Writer's direct telephone: _____ Fax # _____

**THE PORT AUTHORITY OF NY & NJ** Memorandum

| Refer To | Date | Noted By | Date |
|---|---|---|---|
| | | | |
| | | | |
| | | | |
| | | | |
| | | | |
| Return To | | File | |

To: G. Doherty, S. Feldman, W. Giordano, R. Goode, R. Linn, J. Miller, P. Mourges, R. Schulman, S. Smolenski
From: Anthony G. Cracchiolo
Date: November 19, 1985
Subject: PLASTER CEILING DESIGN STANDARDS

Reference: Memorandum, O. Suros, 10/17/85, same subject

Copy To: J. Cohen, V. Dovletian, A. Giordano, D. Hahn, J. M. Kelly, A. Niro, O. Suros, V. Volpicelli, S. Wander, File

The attached Plaster Ceiling Design Standards, prepared by the Engineering Department, will be adopted by the Port Authority as the minimum basis for structural adequacy for all new plaster ceilings and modifications to existing plaster ceilings. The standards will be used for all Port Authority work as well as tenant alteration work.

We recommend that copies of these standards be transmitted to all tenants as an Addendum to the Tenant Construction Review Manual published in March, 1984.

Henceforth, tenant alteration work will be reviewed for compliance with these standards.

Anthony G. Cracchiolo, P.E.
Engineer of Design
Infrastructure Engineering

VAD:si
attachment

(51)

# * B U C K S L I P *

TO: Messrs. V. Berndt, S. Chin, H. Chu, A. Cracchiolo, J. Englot
D. Hahn, J. Harrington, J. Kelly, T. Kelly, V. Klein, J. Lawlor,
R. Leahy, R. Loureiro, D. Montalbano, A. Trivedi, S. Wander,
P. Wood, J. Yao

FROM: Oscar Suros

DATE: October 17, 1985

SUBJECT: PLASTER CEILINGS DESIGN STANDARDS

The attached standards are to be used for all in-house, consultant and tenant designs of plaster ceilings.

O Suros

Oscar Suros, P.E.
Chief Structural Engineer

OS:cem

Attachments

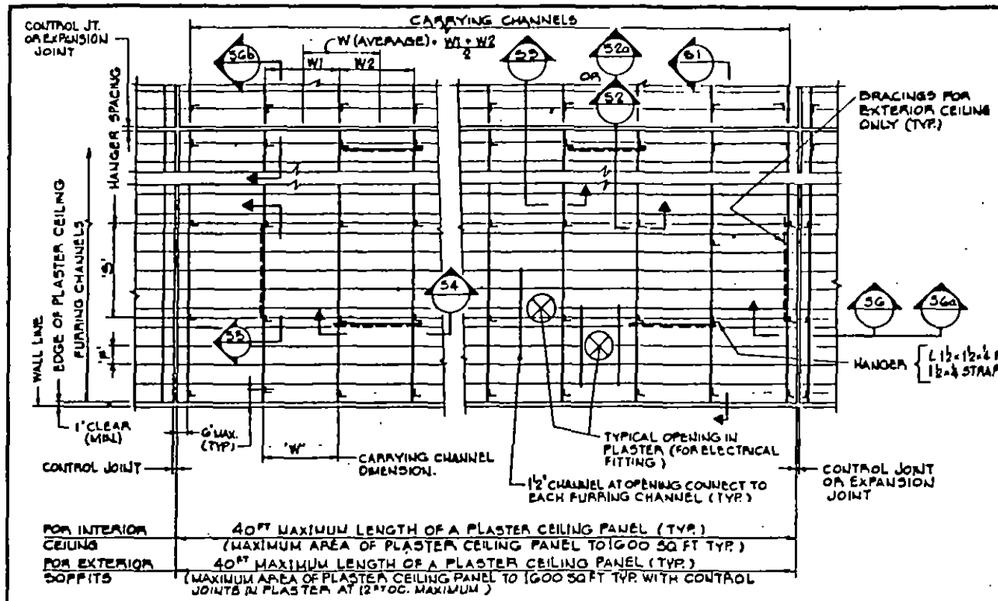


TYPICAL PLAN - EXTERIOR (INACCESSIBLE) PLASTER SOFFITS (SHOWN)
TYPICAL PLAN - INTERIOR (INACCESSIBLE) PLASTER CEILING (SIMILAR)

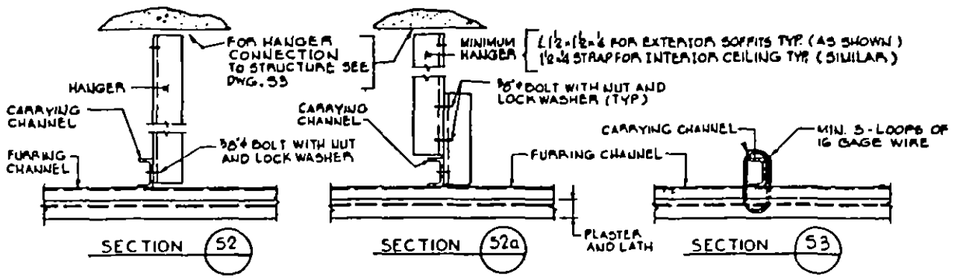


SECTION (52) SECTION (52a) SECTION (53)

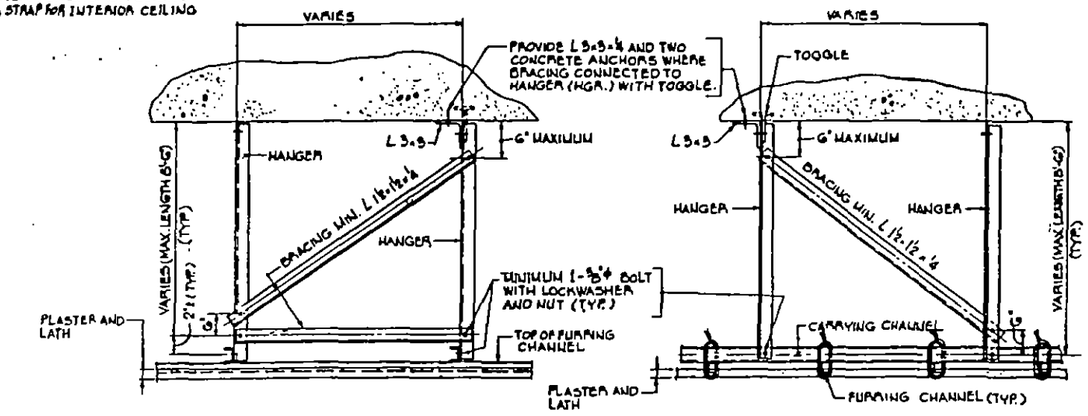


SECTION (54) SECTION (55)

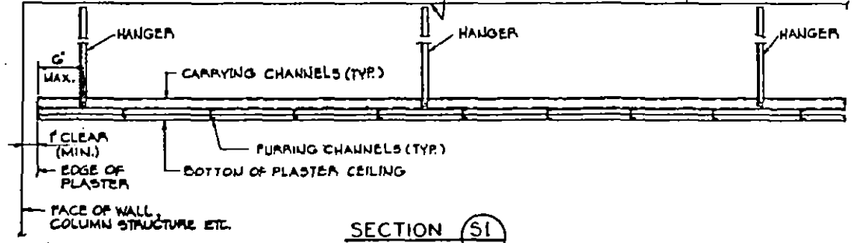


SECTION (51)

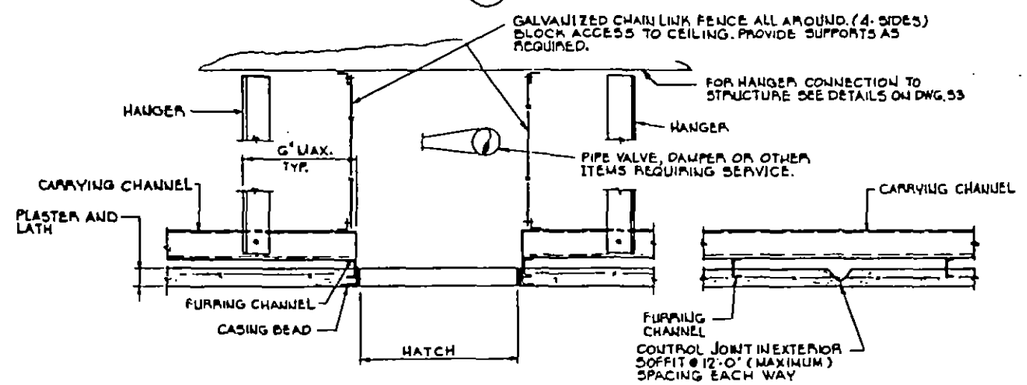


TYPICAL HATCH DETAIL

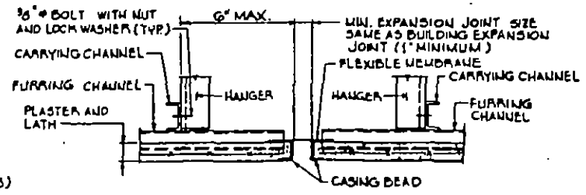


SECTION (56) TYP. EXPANSION JOINT

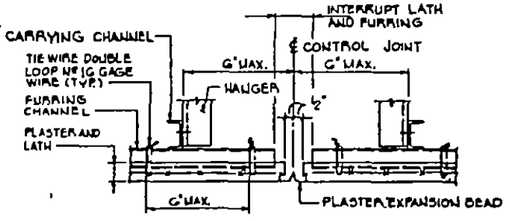


SECTION (56a) TYP. CONTROL JOINT

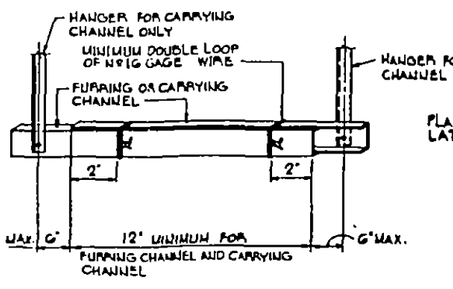


TYPICAL CHANNEL SPLICE DETAIL

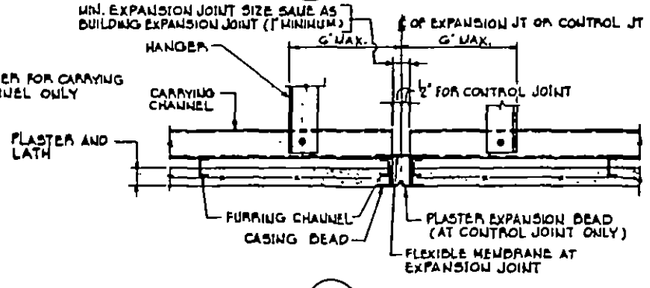


SECTION (56b) TYP. EXPANSION JOINT OR CONTROL JOINT DET.

TYP CONTROL JOINT DETAIL IN PLASTER

DRAWING 24 132 83794 1



THE PORT AUTHORITY OF NY & NJ

CHIEF STRUCTURAL ENGINEER

Title
PLASTER CEILING.. DESIGN STANDARDS

| No | Date | Revision | Approved |
|---|---|---|---|

This drawing subject to corrections in contract. All inventions, ideas, designs and methods herein are reserved to Port Authority and may not be used without its written consent.

| Designed by | Drawn by | Task Leader |
|---|---|---|
| H. PATEL | BROCK | H. PATEL |

Date OCT. 15, 65

Contract Number

Drawing Number
S2

# DESIGN CRITERIA FOR INACCESSIBLE PLASTER CEILINGS

## I. LOADING

A. DEAD LOAD (DL) : 15 PSF FOR CEMENT PLASTER AND 10 PSF FOR GYPSUM PLASTER
   a. USE ACTUAL WHEN GREATER THAN 15 PSF OR 10 PSF, RESPECTIVELY.

B. LIVE LOAD (LL) : 200 LBS CONCENTRATED LOAD

C. WIND LOAD (W) : ( EXTERIOR CEILINGS ONLY )
   a. UP TO 30 FT. CEILING HEIGHT : 30 PSF POSITIVE PRESSURE OR 20 PSF SUCTION NORMAL TO SURFACE
   b. HIGHER THAN 30 FT. : USE WIND FORCES IN ACCORDANCE WITH NEW YORK CITY CODE (NY) OR ANSI A58.1. 1982 (N.J.)
   c. EACH CEILING PANEL SHALL RESIST A LATERAL WIND FORCE OF 2.5 PSF, OR 8.5 PERCENT OF THE POSITIVE WIND PRESSURE, WHICH EVER IS GREATER, ACTING PARALLEL TO THE CEILING SURFACE

D. LOADING COMBINATIONS

| CEILING COMPONENT | INTERIOR | EXTERIOR |
|---|---|---|
| • WIRE TIES<br>• FURRING CHANNEL<br>• CARRYING CHANNEL (MAIN RUNNER) | DL | DL<br>DL + W |
| • FURRING CHANNEL TO CARRYING CHANNEL (MAIN RUNNER CONNECTION)<br>• HANGER CONNECTIONS<br>• CONNECTION TO STRUCTURE | DL + LL | DL + LL<br>DL + LL + W |
| • HANGERS | DL + LL | TENSION :<br>DL + LL<br>DL + LL + W (SUCTION)<br>COMPRESSION :<br>DL + W |
| • BRACING | — | W |

A 33 PERCENT INCREASE IN ALLOWABLE STRESSES IS PERMITTED FOR LOADING COMBINATION DL + LL + W ONLY.

## III. MATERIALS

A. IN ADDITION TO THE MATERIALS SPECIFIED IN SECTION II, THE FOLLOWING MATERIALS SPECIFICATIONS SHALL BE FOLLOWED :
   1. PLASTER : ASTM C926-81 AND ANSI A42.2
   2. SURFACE APPLIED BONDING AGENTS FOR EXTERIOR PLASTERING : ASTM C932-80
   3. LATH : ASTM C841 AND ANSI A42.3

B. THE FOLLOWING MATERIALS SHALL NOT BE USED :
   1. METAL DECK TABS AND HOOKS
   2. POWER ACTUATED ANCHORS
   3. WIRE HANGERS
   4. STOVE BOLTS

C. THE CONTRACTOR SHALL BE REQUIRED TO SUBMIT CATALOG CUTS, SAMPLES, LAYOUT DRAWINGS AND DETAILS OF ALL COMPONENTS OF CEILING SUPPORT SYSTEM FOR THE ENGINEER'S APPROVAL PRIOR TO STARTING OF ANY WORK IN THE FIELD.

## IV. JOINTS

A. CONTROL JOINTS ( DWG. 52- SECT. 5Ga AND 5Gb)
   MAXIMUM LENGTH OF CEILING PANEL BETWEEN CONTROL JOINTS SHALL BE 40 FT. AND MAXIMUM AREA OF THE PANEL SHALL BE 1600 SQ FT.

B. EXPANSION JOINTS (DWG. 52-SECT. 5G AND 5Gb)
   LOCATION AND SIZE OF CEILING EXPANSION JOINTS SHALL MATCH BUILDING EXPANSION JOINTS. EXPANSION JOINTS ARE ALSO REQUIRED WHERE CEILING CHANGES DIRECTION.

## II. DESIGN OF CEILING COMPONENTS

| CEILING COMPONENT | DESIGN PARAMETER | INTERIOR CEMENT PLASTER CEILINGS | INTERIOR GYPSUM PLASTER CEILING | EXTERIOR CEMENT PLASTER SOFFIT | MATERIALS | NOTES |
|---|---|---|---|---|---|---|
| WIRE TIES | MAXIMUM SPACING<br>MINIMUM SIZE | 6 IN.<br>16 GAGE | 6 IN<br>16 GAGE | 6 IN.<br>16 GAGE | STAINLESS STEEL AISI TYPE 304 OR MONEL METAL | a. MIN. DOUBLE LOOP AROUND LATH AND CHANNEL WITH MIN. THREE TWISTED TURNS.<br>b. IN LIEU OF WIRE TIES, B.S. AND A.* OR I.C.B.O.** APPROVED CLIPS MAY BE USED. |
| FURRING CHANNEL | MAXIMUM SPAN (DIM. W)<br>MAXIMUM SPACING<br>( DIM. F )<br>MINIMUM SIZE | 4'-6"<br>1'-6"<br>1½" COLD ROLLED CHANNEL (475 LBS/1000 FT) | 4'-6"<br>1'-6"<br>1½ COLD ROLLED CHANNEL (475 LBS/1000 LF) | 4'-0"<br>1'-0"<br>1½" COLD ROLLED CHANNEL (475 LBS/1000 FT) | HOT ROLLED ASTM A36 OR COLD ROLLED CHANNELS. GALVANIZED FOR EXTERIOR AND PAINTED FOR INTERIOR. | a. MAX. DEFLECTION < SPAN/360<br>b. FURRING CHANNELS AND EDGE CASING BEADS SHALL BE INTERRUPTED AT CONTROL AND EXPANSION JOINTS.<br>c. EDGE CASING BEAD AND EDGE BEAM SHALL NOT BE USED AS SUPPORT FOR CEILING.<br>d. WHERE LIGHT FIXTURE OPENING REQUIRES CUTTING OF ONE FURRING CHANNEL, SUPPORT THE ENDS WITH 1½" CHANNELS<br>e. WHERE LIGHT FIXTURE OPENING REQUIRES CUTTING OF MORE THAN ONE FURRING CHANNEL, USE CARRYING CHANNELS AND HANGERS ON EACH SIDE OF THE OPENING.<br>f. FURRING CHANNEL SPLICES SHALL BE AS SHOWN ON DWG. 52-TYPICAL CHANNEL SPLICE DETAIL. |
| CARRYING CHANNEL | SPACING (DIM. W AVG.)<br>SPAN (DIM. S )<br>SIZE | TABLE 'IP' | TABLE 'IG' | TABLE 'E' | HOT ROLLED ASTM A36 OR COLD ROLLED CHANNELS. GALVANIZED FOR EXTERIOR AND PAINTED FOR INTERIOR. | a. MAX. DEFLECTION < SPAN / 360<br>b. CARRYING CHANNELS SHALL BE INTERRUPTED AT CONTROL AND EXPANSION JOINTS.<br>c. CARRYING CHANNELS SHALL NOT BE INTERRUPTED FOR LIGHT FIXTURE OPENINGS<br>d. CARRYING CHANNEL SPLICES SHALL BE AS SHOWN ON DWG. 52-TYPICAL CHANNEL SPLICE DETAIL. |
| FURRING CHANNEL TO CARRYING CHANNEL CONNECTION | MINIMUM SIZE | MIN. 3 LOOPS OF 16 GAGE WIRE OR L 1½×1½×¼ × 2½" LONG WITH ⅜"ø A307 BOLTS OR CLIPS WITH B.S. AND A. OR I.C.B.O. APPROVAL FOR DESIGN LOADS. | MIN. 3 LOOPS OF 16 GAGE WIRE OR L 1½×1½×¼ × 2½" LONG WITH ⅜"ø A307 BOLTS OR CLIPS WITH B.S. AND A. OR I.C.B.O. APPROVAL FOR DESIGN LOADS. | MIN. 3 LOOPS OF 16 GAGE WIRE OR L 1½×1½×¼ × 2½" LONG WITH ⅜"ø A307 BOLTS OR CLIPS WITH B.S. AND A. OR I.C.B.O. APPROVAL FOR DESIGN LOADS. | HOT ROLLED ASTM A36 OR COLD ROLLED CHANNELS. GALVANIZED FOR EXTERIOR AND PAINTED FOR INTERIOR. | SEE DWG. 52 - SECTION 3 FOR TYPICAL DETAIL. |
| HANGER CONNECTIONS | MINIMUM SIZE | ONE ⅜"ø BOLT | ONE ⅜"ø BOLT | ONE ⅜"ø BOLT | A307 BOLTS, NUTS AND, LOCK WASHER (GALVANIZED) | SEE DWG. 52 - SECTIONS 2 AND 2a FOR TYPICAL DETAILS. |
| HANGER | MINIMUM SIZE<br>MAXIMUM SPACING | 1½"×¼" STRAP<br>4'-6" O.C. EACH WAY<br>ACTUAL SPACING DEPENDS ON CARRYING CHANNEL SIZE-SEE TABLE IP | 1½×¼ STRAP<br>4'-6"O.C. EACH WAY<br>ACTUAL SPACING DEPENDS ON CARRYING CHANNEL SIZE-SEE TABLE IG | L 1½×1½×¼"<br>4'-6"O.C. EACH WAY<br>ACTUAL SPACING DEPENDS ON CARRYING CHANNEL SIZE-SEE TABLE E | HOT ROLLED ASTM A36 STEEL. GALVANIZED FOR EXTERIOR AND PAINTED FOR INTERIOR | a. HANGER SPLICES SHALL HAVE A MINIMUM OF 2-⅜"ø BOLTS WITH NUTS AND LOCK WASHERS<br>b. HANGER SHALL BE VERTICALLY PLUMB |
| CONNECTION TO STRUCTURE | | SEE DWG. 53 | SEE DWG. 53 | SEE DWG. 53 | SEE DWG. 53 | MINIMUM THICKNESS OF STEEL MEMBERS FOR EXTERIOR SOFFITS SHALL BE ¼" |
| BRACING | | NONE REQUIRED | NONE REQUIRED | MIN. TWO BRACINGS IN EACH DIRECTION PER PANEL | | a. SEE DWG. 52 - SECTIONS 34 AND 35 |

NOTE : IN CASES WHERE ACTUAL LOADS ARE HIGHER THAN SPECIFIED UNDER LOADING ( SECTION I ) DESIGN SHALL BE PREPARED IN ACCORDANCE WITH THE DESIGN PROCEDURES FOR RUNNER CHANNELS ( METAL LATH MANUFACTURERS ASSOCIATION ).

* BOARD OF STANDARDS AND APPEALS OF NEW YORK CITY.
** INTERNATIONAL CONFERENCE OF BUILDING OFFICIALS.

### MINIMUM SIZE OF CARRYING CHANNEL FOR INTERIOR INACCESSIBLE PLASTER CEILINGS

TABLE 'IP'

| 'W' AVERAGE \ 'S' | 3'-6" | 3'-9" | 4'-0" | 4'-3" | 4'-6" |
|---|---|---|---|---|---|
| 3'-1" | 1½" C.R.-C 475 LBS/1000 L.FT | | | | |
| 3'-3" | 1½" CHANNEL (HOT ROLLED) MINIMUM WEIGHT = 1120 LBS./1000 L-FT | | | | |
| 3'-9" | | | | 2" CHANNEL (HOT ROLLED) MINIMUM WEIGHT = 1260 LBS/1000 L-FT. | |
| 4'-0" | | | | | |
| 4'-2" | | | | | |
| 4'-6" | | | | | |

SIZES, SPANS AND SPACINGS SHOWN ARE FOR DEAD LOAD = 15 PSF.

### MINIMUM SIZE OF CARRYING CHANNEL FOR INTERIOR INACCESSIBLE GYPSUM PLASTER CEILINGS

TABLE 'IG'

| 'W' AVERAGE \ 'S' | 5'-6" | 5'-9" | 4'-0" | 4'-3" | 4'-6" |
|---|---|---|---|---|---|
| 2'-9" | 1½" CHANNEL (COLD ROLLED) MINIMUM WEIGHT = 475 LBS/1000 L-FT. | | | | |
| 5'-0" | | | | | |
| 3'-6" | | | | 1½ CHANNEL (HOT ROLLED) MINIMUM WEIGHT = 1120 LBS/1000 L-FT. | |
| 4'-0" | | | | | |
| 4'-6" | | | | | |

SIZES, SPANS AND SPACINGS SHOWN ARE FOR DEAD LOAD = 10 PSF

### MINIMUM SIZE OF CARRYING CHANNEL FOR EXTERIOR INACCESSIBLE PLASTER SOFFITS

TABLE 'E'

| 'W' AVERAGE \ 'S' | 3'-0" | 3'-3" | 5'-6" | 5'-9" | 4'-0" | 4'-6" |
|---|---|---|---|---|---|---|
| 2'-1" | 1½" CHANNEL (HOT ROLLED) MINIMUM WEIGHT = 1120 LBS/1000 L-FT. | | | | | |
| 2'-4" | | | | | | |
| 2'-6" | | | 2" CHANNEL (HOT ROLLED) MINIMUM WEIGHT = 1260 LBS/1000 LBS L-FT - | | | |
| 2'-8" | | | | | | |
| 3'-1" | | | | | | |
| 3'-6" | | | | 2½" CHANNEL (HOT ROLLED) MINIMUM WT. 2270 LBS/1000 L-FT | | |
| 4'-0" | | | | | | |

SIZES, SPANS AND SPACINGS SHOWN ARE FOR 15 PSF DEAD LOAD + 20 PSF WIND SUCTION.

Sheet 1 of 3

THE PORT AUTHORITY OF NY & NJ

CHIEF STRUCTURAL ENGINEER

Title
PLASTER CEILING DESIGN STANDARDS

| No. | Date | Revision | Approved |
|---|---|---|---|

This drawing subject to conditions in contract. All inventions, ideas, designs and methods herein are reserved to Port Authority and may not be used without its written consent.

H. PATEL (Designed by) — Block (Drawn by) — H. PATEL (Task Leader)

Date OCT. 15, 85

Contract Number

Drawing Number 51

DRAWING AA 132-137961

# DESIGN CRITERIA FOR INACCESSIBLE PLASTER CEILINGS

**THE PORT AUTHORITY OF NY & NJ**

CHIEF STRUCTURAL ENGINEER

## I. LOADING

A. DEAD LOAD (DL) : 15 PSF FOR CEMENT PLASTER AND 10 PSF FOR GYPSUM PLASTER
   a. USE ACTUAL WHEN GREATER THAN 15 PSF OR 10 PSF, RESPECTIVELY.

B. LIVE LOAD (LL) : 200 LBS. CONCENTRATED LOAD

C. WIND LOAD (W) : (EXTERIOR CEILINGS ONLY)
   a. UP TO 50 FT. CEILING HEIGHT : 30 PSF POSITIVE PRESSURE OR 20 PSF SUCTION NORMAL TO SURFACE
   b. HIGHER THAN 50 FT. : USE WIND FORCES IN ACCORDANCE WITH NEW YORK CITY CODE (NY) OR ANSI A58.1. 1982 (N.J.)
   c. EACH CEILING PANEL SHALL RESIST A LATERAL WIND FORCE OF 2.5 PSF. OR 8.5 PERCENT OF THE POSTIVE WIND PRESSURE, WHICH EVER IS GREATER, ACTING PARALLEL TO THE CEILING SURFACE

D. LOADING COMBINATIONS

| CEILING COMPONENT | INTERIOR | EXTERIOR |
|---|---|---|
| • WIRE TIES<br>• FURRING CHANNEL<br>• CARRYING CHANNEL (MAIN RUNNER) | DL | DL<br>DL + W |
| • FURRING CHANNEL TO CARRYING CHANNEL (MAIN RUNNER CONNECTION)<br>• HANGER CONNECTIONS<br>• CONNECTION TO STRUCTURE | DL + LL | DL + LL<br>DL + LL + W |
| • HANGERS | DL + LL | TENSION :<br>DL + LL<br>DL + LL + W (SUCTION)<br>COMPRESSION :<br>DL + W |
| • BRACING | — | W |

A 33 PERCENT INCREASE IN ALLOWABLE STRESSES IS PERMITTED FOR LOADING COMBINATION DL + LL + W ONLY.

## II. DESIGN OF CEILING COMPONENTS

| CEILING COMPONENT | DESIGN PARAMETER | INTERIOR CEMENT PLASTER CEILINGS | INTERIOR GYPSUM PLASTER CEILING | EXTERIOR CEMENT PLASTER SOFFIT | MATERIALS | NOTES |
|---|---|---|---|---|---|---|
| WIRE TIES | MAXIMUM SPACING<br>MINIMUM SIZE | 6 IN.<br>16 GAGE | 6 IN.<br>16 GAGE | 6 IN.<br>16 GAGE | STAINLESS STEEL AISI TYPE 304 OR MONEL METAL | a. MIN. DOUBLE LOOP AROUND LATH AND CHANNEL WITH MIN. THREE TWISTED TURNS.<br>b. IN LIEU OF WIRE TIES, B.S. AND A.* OR I.C.B.O.** APPROVED CLIPS MAY BE USED. |
| FURRING CHANNEL | MAXIMUM SPAN (DIM. W)<br>MAXIMUM SPACING (DIM. F)<br>MINIMUM SIZE | 4'-6"<br>1'-6"<br>1½" COLD ROLLED CHANNEL (475 LBS/1000 FT) | 4'-6"<br>1'-6"<br>1½ COLD ROLLED CHANNEL (475 LBS/1000 LF) | 4'-0"<br>1'-0"<br>1½" COLD ROLLED CHANNEL (475 LBS/1000 FT) | HOT ROLLED ASTM A36 OR COLD ROLLED CHANNELS. GALVANIZED FOR EXTERIOR AND PAINTED FOR INTERIOR. | a. MAX. DEFLECTION < SPAN / 360<br>b. FURRING CHANNELS AND EDGE CASING BEADS SHALL BE INTERRUPTED AT CONTROL AND EXPANSION JOINTS.<br>c. EDGE CASING BEAD AND EDGE BEAM SHALL NOT BE USED AS SUPPORT FOR CEILING.<br>d. WHERE LIGHT FIXTURE OPENING REQUIRES CUTTING OF ONE FURRING CHANNEL, SUPPORT THE ENDS WITH 1½" CHANNELS<br>e. WHERE LIGHT FIXTURE OPENING REQUIRES CUTTING OF MORE THAN ONE FURRING CHANNEL, USE CARRYING CHANNELS AND HANGERS ON EACH SIDE OF THE OPENING.<br>f. FURRING CHANNEL SPLICES SHALL BE AS SHOWN ON DWG. S2-TYPICAL CHANNEL SPLICE DETAIL. |
| CARRYING CHANNEL | SPACING (DIM. W AVG.)<br>SPAN (DIM. S)<br>SIZE | TABLE 'IP' | TABLE 'IG' | TABLE 'E' | HOT ROLLED ASTM A36 OR COLD ROLLED CHANNELS. GALVANIZED FOR EXTERIOR AND PAINTED FOR INTERIOR. | a. MAX. DEFLECTION < SPAN / 360<br>b. CARRYING CHANNELS SHALL BE INTERRUPTED AT CONTROL AND EXPANSION JOINTS.<br>c. CARRYING CHANNELS SHALL NOT BE INTERRUPTED FOR LIGHT FIXTURE OPENINGS<br>d. CARRYING CHANNEL SPLICES SHALL BE AS SHOWN ON DWG. S2-TYPICAL CHANNEL SPLICE DETAIL. |
| FURRING CHANNEL TO CARRYING CHANNEL CONNECTION | MINIMUM SIZE | MIN. 3 LOOPS OF 16 GAGE WIRE OR L 1½×1½×¼ × 2½" LONG WITH ⅜"φ A307 BOLTS OR CLIPS WITH B.S. AND A. OR I.C.B.O. APPROVAL FOR DESIGN LOADS. | MIN. 3 LOOPS OF 16 GAGE WIRE OR L 1½×1½×¼ × 2½" LONG WITH ⅜"φ A307 BOLTS OR CLIPS WITH B.S. AND A. OR I.C.B.O. APPROVAL FOR DESIGN LOADS. | MIN. 3 LOOPS OF 16 GAGE WIRE OR L 1½×1½×¼ × 2½" LONG WITH ⅜"φ A307 BOLTS OR CLIPS WITH B.S. AND A. OR I.C.B.O. APPROVAL FOR DESIGN LOADS. | HOT ROLLED ASTM A36 OR COLD ROLLED CHANNELS. GALVANIZED FOR EXTERIOR AND PAINTED FOR INTERIOR. | SEE DWG. S2 - SECTION 3 FOR TYPICAL DETAIL. |
| HANGER CONNECTIONS | MINIMUM SIZE | ONE ⅜"φ BOLT | ONE ⅜"φ BOLT | ONE ⅜"φ BOLT | A307 BOLTS, NUTS AND, LOCK WASHER (GALVANIZED) | SEE DWG. S2 - SECTIONS 2 AND 2a FOR TYPICAL DETAILS. |
| HANGER | MINIMUM SIZE<br>MAXIMUM SPACING | 1½"×¼" STRAP<br>4'-6" O.C. EACH WAY ACTUAL SPACING DEPENDS ON CARRYING CHANNEL SIZE-SEE TABLE IP | 1½×¼ STRAP<br>4'-6" O.C. EACH WAY ACTUAL SPACING DEPENDS ON CARRYING CHANNEL SIZE-SEE TABLE IG | L 1½×1½×¼"<br>4'-6" O.C. EACH WAY ACTUAL SPACING DEPENDS ON CARRYING CHANNEL SIZE-SEE TABLE E | HOT ROLLED ASTM A36 STEEL. GALVANIZED FOR EXTERIOR AND PAINTED FOR INTERIOR | a. HANGER SPLICES SHALL HAVE A MINIMUM OF 2-⅜"φ BOLTS WITH NUTS AND LOCK WASHERS<br>b. HANGER SHALL BE VERTICALLY PLUMB |
| CONNECTION TO STRUCTURE | | SEE DWG. S3 | SEE DWG. S3 | SEE DWG. S3 | SEE DWG. S3 | MINIMUM THICKNESS OF STEEL MEMBERS FOR EXTERIOR SOFFITS SHALL BE ¼" |
| BRACING | | NONE REQUIRED | NONE REQUIRED | MIN. TWO BRACINGS IN EACH DIRECTION PER PANEL | | a. SEE DWG. S2 - SECTIONS S4 AND S5 |

NOTE : IN CASES WHERE ACTUAL LOADS ARE HIGHER THAN SPECIFIED UNDER LOADING (SECTION I) DESIGN SHALL BE PREPARED IN ACCORDANCE WITH THE DESIGN PROCEDURES FOR RUNNER CHANNELS (METAL LATH MANUFACTURERS ASSOCIATION).

* BOARD OF STANDARDS AND APPEALS OF NEW YORK CITY.
** INTERNATIONAL CONFERENCE OF BUILDING OFFICIALS.

## III. MATERIALS

A. IN ADDITION TO THE MATERIALS SPECIFIED IN SECTION II, THE FOLLOWING MATERIALS SPECIFICATIONS SHALL BE FOLLOWED :
   1. PLASTER : ASTM C926-81 AND ANSI A42.2
   2. SURFACE APPLIED BONDING AGENTS FOR EXTERIOR PLASTERING : ASTM C932-80
   3. LATH : ASTM C841 AND ANSI A42.3

B. THE FOLLOWING MATERIALS SHALL NOT BE USED :
   1. METAL DECK TABS AND HOOKS
   2. POWER ACTUATED ANCHORS
   3. WIRE HANGERS
   4. STOVE BOLTS

C. THE CONTRACTOR SHALL BE REQUIRED TO SUBMIT CATALOG CUTS, SAMPLES, LAYOUT DRAWINGS AND DETAILS OF ALL COMPONENTS OF CEILING SUPPORT SYSTEM FOR THE ENGINEER'S APPROVAL PRIOR TO STARTING OF ANY WORK IN THE FIELD.

## IV. JOINTS

A. CONTROL JOINTS (DWG. S2- SECT. S6a AND S6b)
   MAXIMUM LENGTH OF CEILING PANEL BETWEEN CONTROL JOINTS SHALL BE 40 FT AND MAXIMUM AREA OF THE PANEL SHALL BE 1600 SQ FT.

B. EXPANSION JOINTS (DWG. S2-SECT. S6 AND S6b)
   LOCATION AND SIZE OF CEILING EXPANSION JOINTS SHALL MATCH BUILDING EXPANSION JOINTS. EXPANSION JOINTS ARE ALSO REQUIRED WHERE CEILING CHANGES DIRECTION.

### MINIMUM SIZE OF CARRYING CHANNEL FOR INTERIOR INACCESSIBLE PLASTER CEILINGS

### TABLE 'IP'

| 'W' AVERAGE \ 'S' | 3'-6" | 3'-9" | 4'-0" | 4'-3" | 4'-6" |
|---|---|---|---|---|---|
| 3'-1" | 1½" C.R.-C 475 LBS/ 1000 L.FT | | | | |
| 3'-3" | | | | | |
| 3'-9" | | | | | |
| 4'-0" | | | | | |
| 4'-2" | | | | | |
| 4'-6" | | | | | |

1½" CHANNEL (HOT ROLLED) MINIMUM WEIGHT = 1120 LBS./1000 L-FT

2" CHANNEL (HOT ROLLED) MINIMUM WEIGHT = 1260 LBS/1000 L-FT.

SIZES, SPANS AND SPACINGS SHOWN ARE FOR DEAD LOAD = 15 PSF

### MINIMUM SIZE OF CARRYING CHANNEL FOR INTERIOR INACCESSIBLE GYPSUM PLASTER CEILINGS

### TABLE 'IG'

| 'W' AVERAGE \ 'S' | 3'-6" | 3'-9" | 4'-0" | 4'-3 | 4'-6" |
|---|---|---|---|---|---|
| | | | | | |
| 2'-9" | | | | | |
| 3'-0" | | | | | |
| 3'-6" | | | | | |
| 4'-0" | | | | | |
| 4'-6" | | | | | |

1½" CHANNEL (COLD ROLLED) MINIMUM WEIGHT = 475 LBS/1000 L-FT.

1½" CHANNEL (HOT ROLLED) MINIMUM WEIGHT = 1120 LBS/1000 L-FT

SIZES, SPANS AND SPACINGS SHOWN ARE FOR DEAD LOAD = 10 PSF

### MINIMUM SIZE OF CARRYING CHANNEL FOR EXTERIOR INACCESSIBLE PLASTER SOFFITS

### TABLE 'E'

| 'W' AVERAGE \ 'S' | 3'-0" | 3'-3" | 3'-6" | 3'-9" | 4'-0" | 4'-6" |
|---|---|---|---|---|---|---|
| 2'-1" | | | | | | |
| 2'-4" | | | | | | |
| 2'-6" | | | | | | |
| 2'-8" | | | | | | |
| 3'-1" | | | | | | |
| 3'-6" | | | | | | |
| 4'-0" | | | | | | |

1½" CHANNEL (HOT ROLLED) MINIMUM WEIGHT = 1120 LBS/1000 L-FT

2" CHANNEL (HOT ROLLED) MINIMUM WEIGHT = 1260 LBS/ 1000 LBS L-FT

2½" CHANNEL (HOT ROLLED) MINIMUM WT. 2270 LBS/1000 L-FT.

SIZES, SPANS AND SPACINGS SHOWN ARE FOR 15 PSF DEAD LOAD + 20 PSF WIND SUCTION.

S = Hanger spacing
W = carrying channel spacing
F = [illegible] spacing

Title
PLASTER CEILING DESIGN STANDARDS

| No | Date | Revision | Approved |
|---|---|---|---|
| | | | |

This drawing subject to conditions in contract. All inventions, ideas, designs and methods herein are reserved to Port Authority and may not be used without its written consent

H. PATEL — Designed by
Mock — Drawn by
H. PATEL — Task Leader

Date OCT. 15, 85

Contract Number

Drawing Number S1

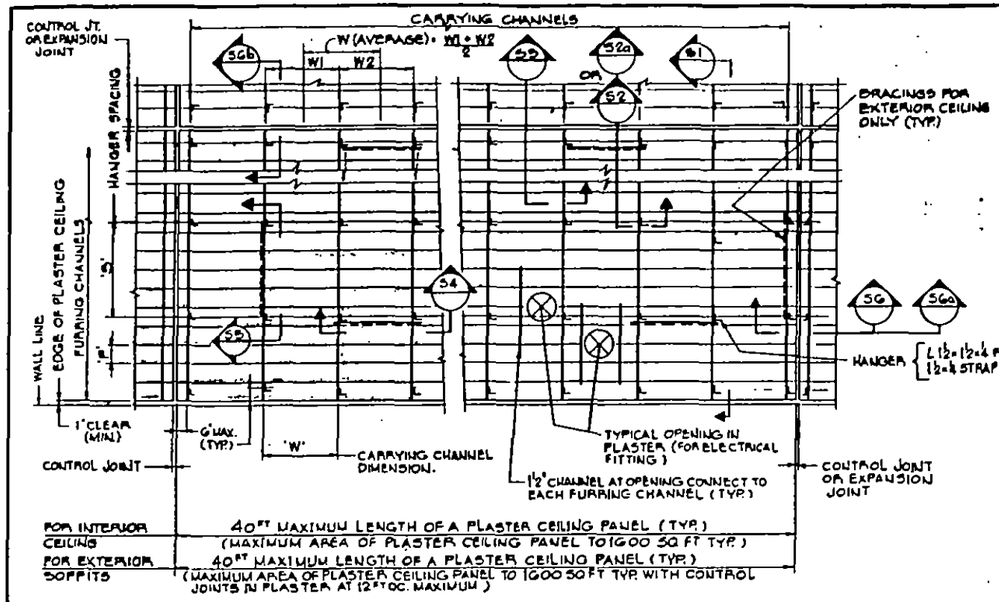


TYPICAL PLAN - EXTERIOR (INACCESSIBLE) PLASTER SOFFITS (SHOWN)
TYPICAL PLAN - INTERIOR (INACCESSIBLE) PLASTER CEILING (SIMILAR)

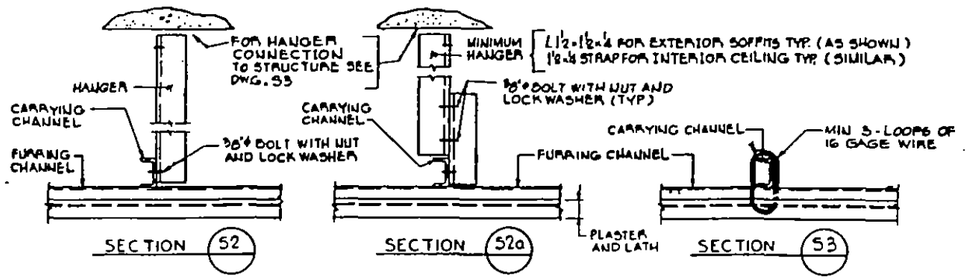


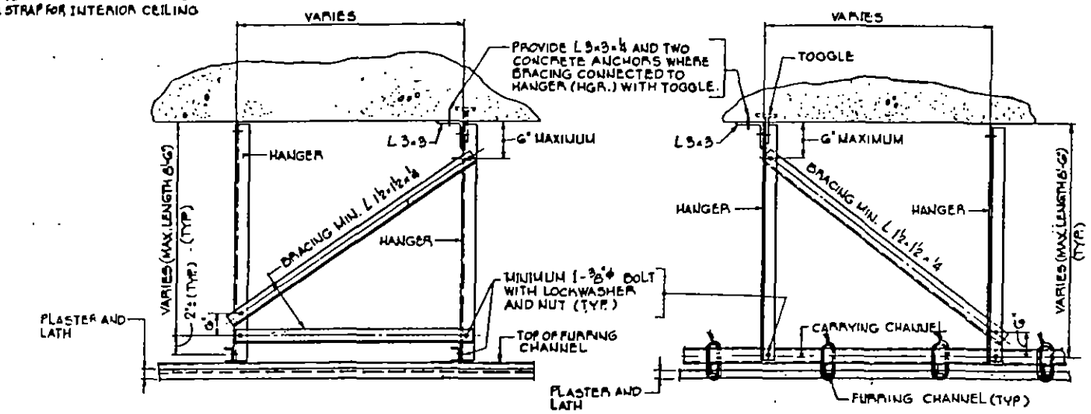


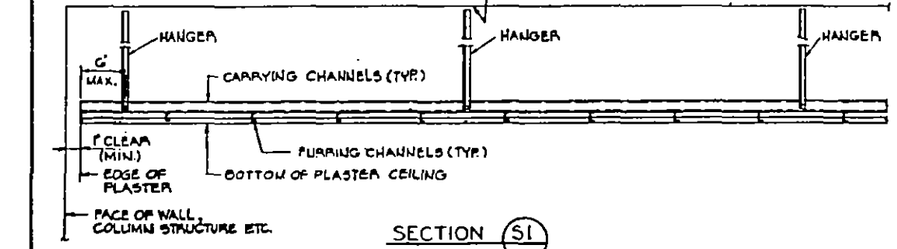


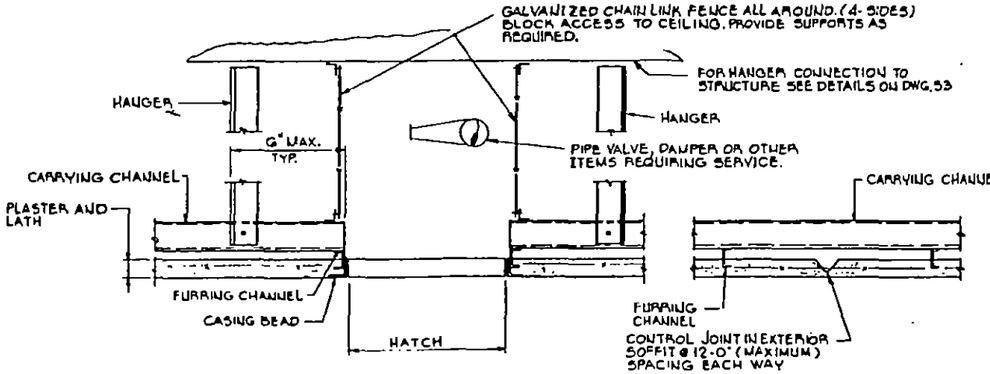


TYPICAL HATCH DETAIL

TYP CONTROL JOINT DETAIL IN PLASTER

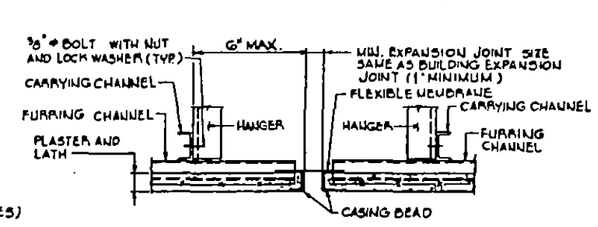


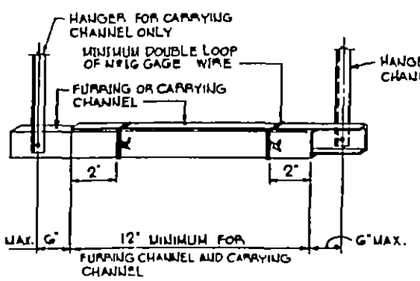


TYPICAL CHANNEL SPLICE DETAIL

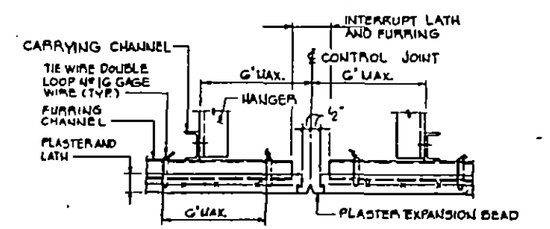


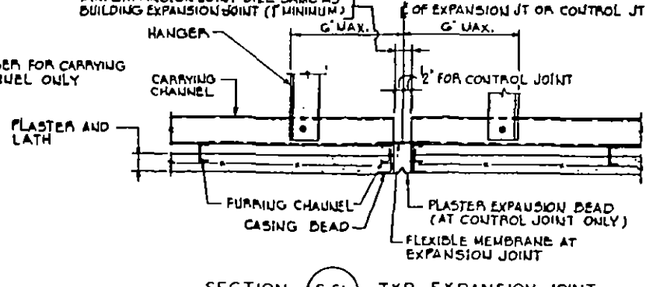


Sheet 2 of 3

THE PORT AUTHORITY OF NY & NJ

CHIEF STRUCTURAL ENGINEER

Title
PLASTER CEILING . DESIGN STANDARDS

| No | Date | Revision | Approved |
|---|---|---|---|

This drawing subject to conditions in contract. All inventions, ideas, designs and methods herein are reserved to Port Authority and may not be used without its written consent.

| Designed by | Drawn by | Task Leader |
|---|---|---|
| H. PATEL | EMock | H. PATEL |

Date OCT. 15, 85

Contract Number

Drawing Number
S2

# TYPICAL DETAILS FOR HANGER CONNECTION TO STRUCTURE

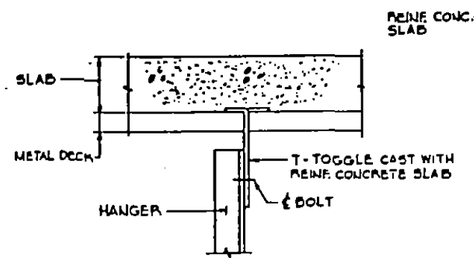


DETAIL - A

TOGGLE IN CONCRETE SLAB OVER METAL DECK

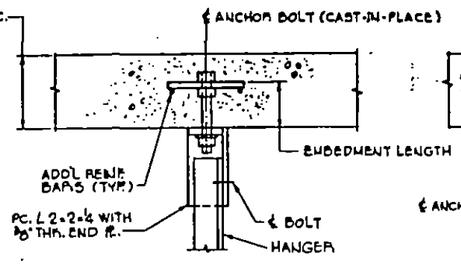


DETAIL - B

CAST IN ANCHOR BOLT IN CONCRETE SLAB

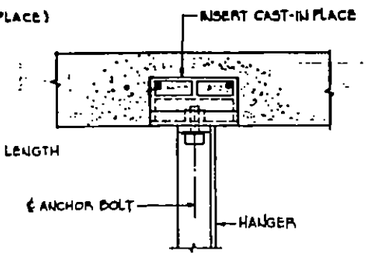


DETAIL - C

INSERT IN CONCRETE SLAB

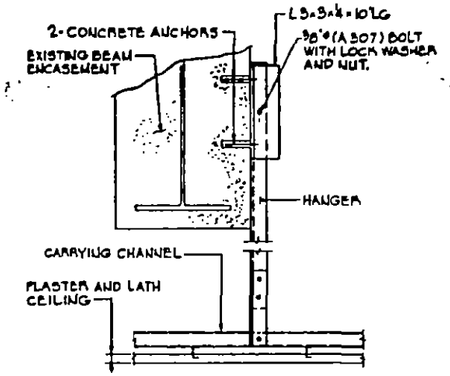


DETAIL - D

CONCRETE ANCHORS IN ENCASED STEEL BEAM

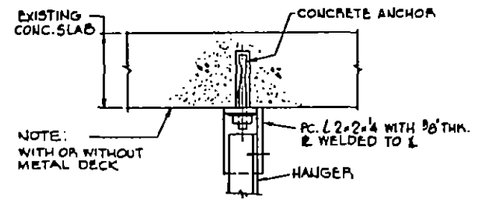


DETAIL - E

CONCRETE ANCHOR IN SLAB

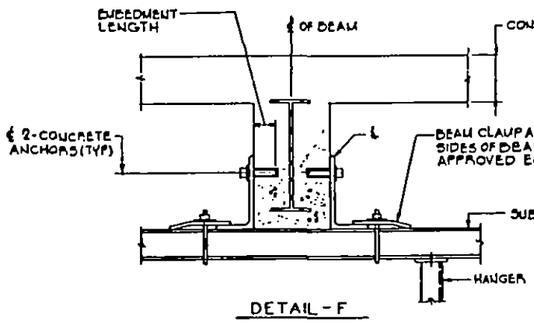


DETAIL - F

SUBFRAMING AT ENCASED BEAM

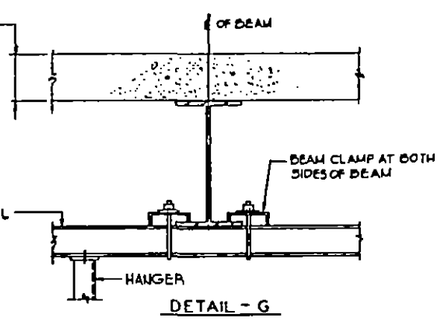


DETAIL - G

SUBFRAMING CLAMPED TO STEEL BEAM

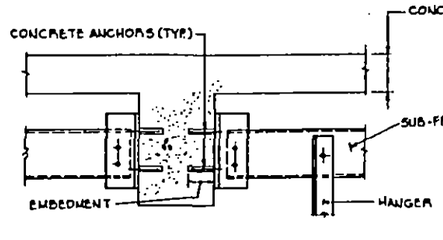


DETAIL - H

SUBFRAMING AT CONCRETE BEAM

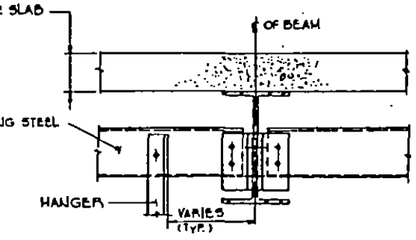


DETAIL - I

SUBFRAMING CONNECTED TO STEEL BEAM

## CONNECTION TO STRUCTURE - MATERIALS

1. T-TOGGLES (DETAIL A)
   GALVANIZED, MINIMUM SIZE 1½" × ¼" USE WITH NEW SLAB CONSTRUCTION WITH METAL DECK.
2. CONCRETE INSERTS (DETAILS B AND C)
   USE WITH NEW SLAB CONSTRUCTION WITHOUT METAL DECK
   ACCEPTABLE TYPES:
   UNISTRUT - P3200 SERIES, P3300 SERIES AND M24 (SPOT)
   B-LINE - B2505
   DAYTON - SUPERIOR - F14 OR APPROVED EQUAL.
3. CONCRETE ANCHORS (DETAILS D AND E)
   ACCEPTABLE TYPES:
   HILTI - HSL AND HSLB
   LIEBIG - SAFETY BOLTS
4. STEEL SUB-FRAMING (DETAILS F,G,H AND I)
   DESIGN IN ACCORDANCE WITH AISC OR AISI (COLD FORMED)

Sheet 3 of 3

THE PORT AUTHORITY OF NY & NJ

CHIEF STRUCTURAL ENGINEER

Title
PLASTER CEILING DESIGN STANDARDS

| No | Date | Revision | Approved |
|---|---|---|---|

This drawing subject to conditions in contract. All inventions, ideas, designs and methods herein are reserved to Port Authority and may not be used without its written consent.

| Designed by | Drawn by | Task Leader |
|---|---|---|
| H PATEL | RMock | H. PATEL |

Date OCT. 15, 65

Contract Number

Drawing Number
S3

For lightweight (4 psf or less) the design and installation of all ceiling components except hangers and their top and bottom connections shall comply with:

ASTM C635 - Standard Specification for Metal Suspension Systems for Acoustical Tile and Lay-in Panel Ceilings
ASTM C636 - Standard Practice for Installation of Metal Ceiling Suspension Systems for Acoustical Tile and Lay-in Panels

For the design and installation of hangers and their top and bottom connections, revise the above ASTM standards as follows:

a) The hanger and its connections shall safely carry the total supported load plus 200 pounds. The additional loading is consistent with fire department recommendations to avoid progressive collapses.
b) Hangers for suspending carrying channels or main runners from an existing structure shall be 1/4 inch diameter galvanized steel rods, 1/8" x 1" galvanized steel flat bars or No. 9 - gage galvanized, soft-annealed, mild steel wire.
c) Metal deck tabs shall not be allowed as a top hanger connection.

Submit details.

GFB

**THE PORT AUTHORITY OF NY & NJ**

Memorandum

10/10/86

| Refer To | Date | Noted By | Date |
|---|---|---|---|
| | | | |
| | | | |
| | | | |
| | | | |
| Return To | | File | |

To: R. M. Monti, P.E., Director of Engineering & Chief Engineer
From: Oscar Suros
Date: September 29, 1986
Subject: LIGHTWEIGHT CEILING STANDARDS - NEW JERSEY CONSTRUCTION

Reference:

Copy To: D. Hahn

The latest edition (1984) of the BOCA Code does not address lightweight (4 psf or less) ceilings. In order to establish an acceptable method of construction, it is recommended that the following standards be used for lightweight ceilings in New Jersey.

For the design and installation of all ceiling components except hangers and their top and bottom connections:

ASTM C635 - Standard Specification for Metal Suspension Systems for Acoustical Tile and Lay-in Panel Ceilings
ASTM C636 - Standard Practice for Installation of Metal Ceiling Suspension Systems for Acoustical Tile and Lay-in Panels

For the design and installation of hangers and their top and bottom connections, revise the above ASTM standards as follows:

a) The hanger and its connections shall safely carry the total supported load plus 200 pounds. The additional loading is consistent with fire department recommendations to avoid progressive collapses.
b) Hangers for suspending carrying channels or main runners from an existing structure shall be 1/4 inch diameter, galvanized steel rods, 1/8" x 1" galvanized steel flat bars or No. 9 - gage galvanized, soft-annealed, mild steel wire.
c) Metal deck tabs shall not be allowed as a top hanger connection.

Oscar Suros, P.E.
Chief Structural Engineer

CONCURRED:
Asst. Chief Engineer for Design

APPROVED:
Director of Engineering &
Chief Engineer

PA 90A
7-86

# THE PORT AUTHORITY OF NEW YORK AND NEW JERSEY

## SUSPENDED LIGHTWEIGHT CEILINGS DESIGN CRITERIA

(FOR USE IN NEW JERSEY)

The design and installation of all lightweight ceiling components, except hangers and their top and bottom connections, shall comply with;

ASTM C635 -Standard Specification for Metal Suspension Systems for Acoustical Tile and Lay-in Panel Ceilings

ASTM C636 - Standard Practice for Installation of Metal Ceiling Suspension Systems for Acoustical Tile and Lay-in Panels

For the design and installation of hangers and their top and bottom connections, revise the above ASTM Standards as follows:

a) The hanger and its connections shall safely carry the total supported load plus 200 pounds. The additional loading is consistent with fire department recommendations to avoid progressive collapses.

b) Hangers for suspending carrying channels or main runners from an existing structure shall be 1/4 inch diameter galvanized steel rods, 1/8" x 1" galvanized steel flat bars or No. 9 - gauge galvanized, soft-annealed, mild steel wire.

c) Metal deck tabs shall not be allowed as a top hanger connection.

Approved: 9/29/86

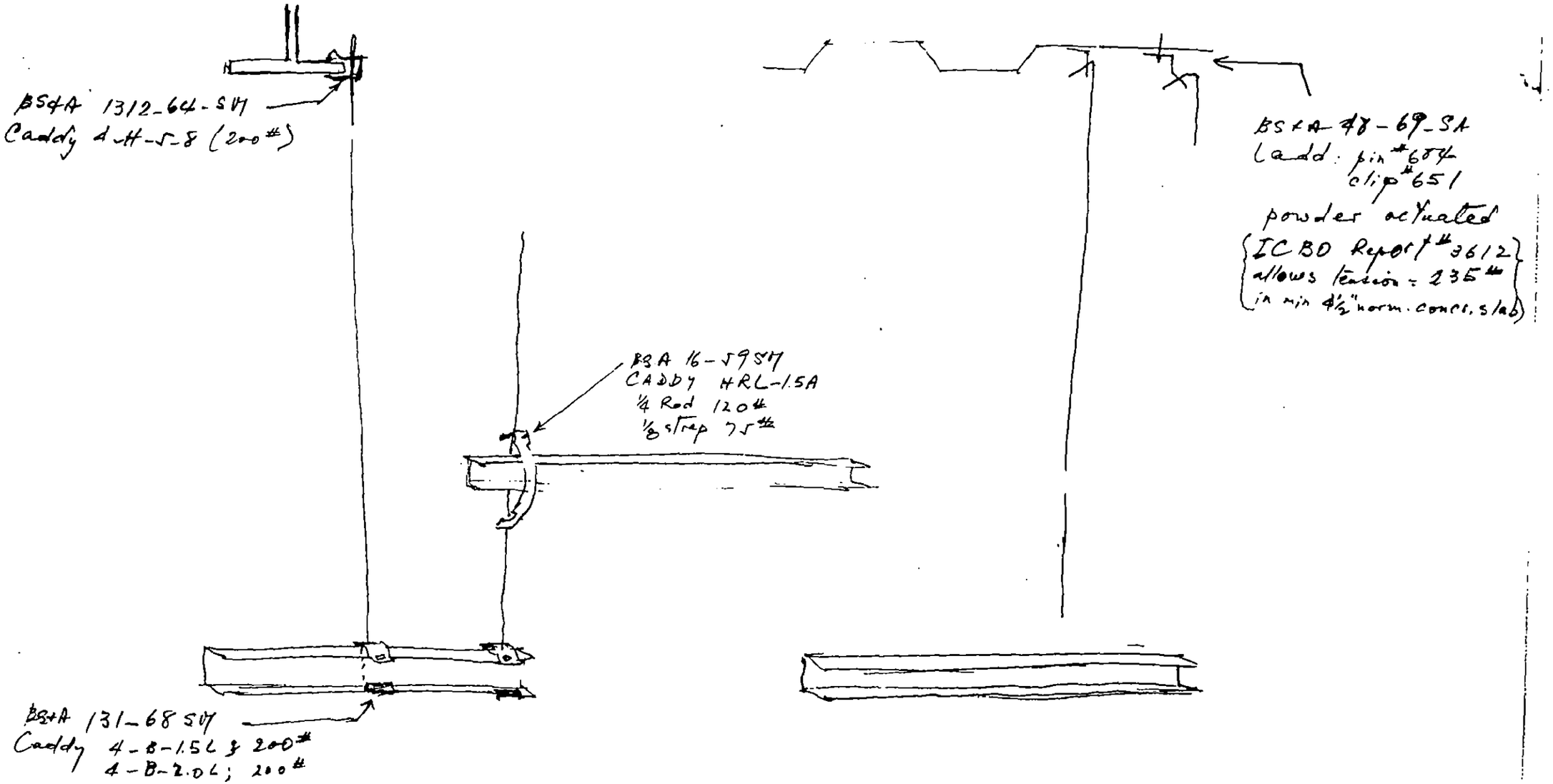


4B2LS = 250# max
4B1.5LS = 200# "

} BS+A 131-68 SM
Amended 10.28.86

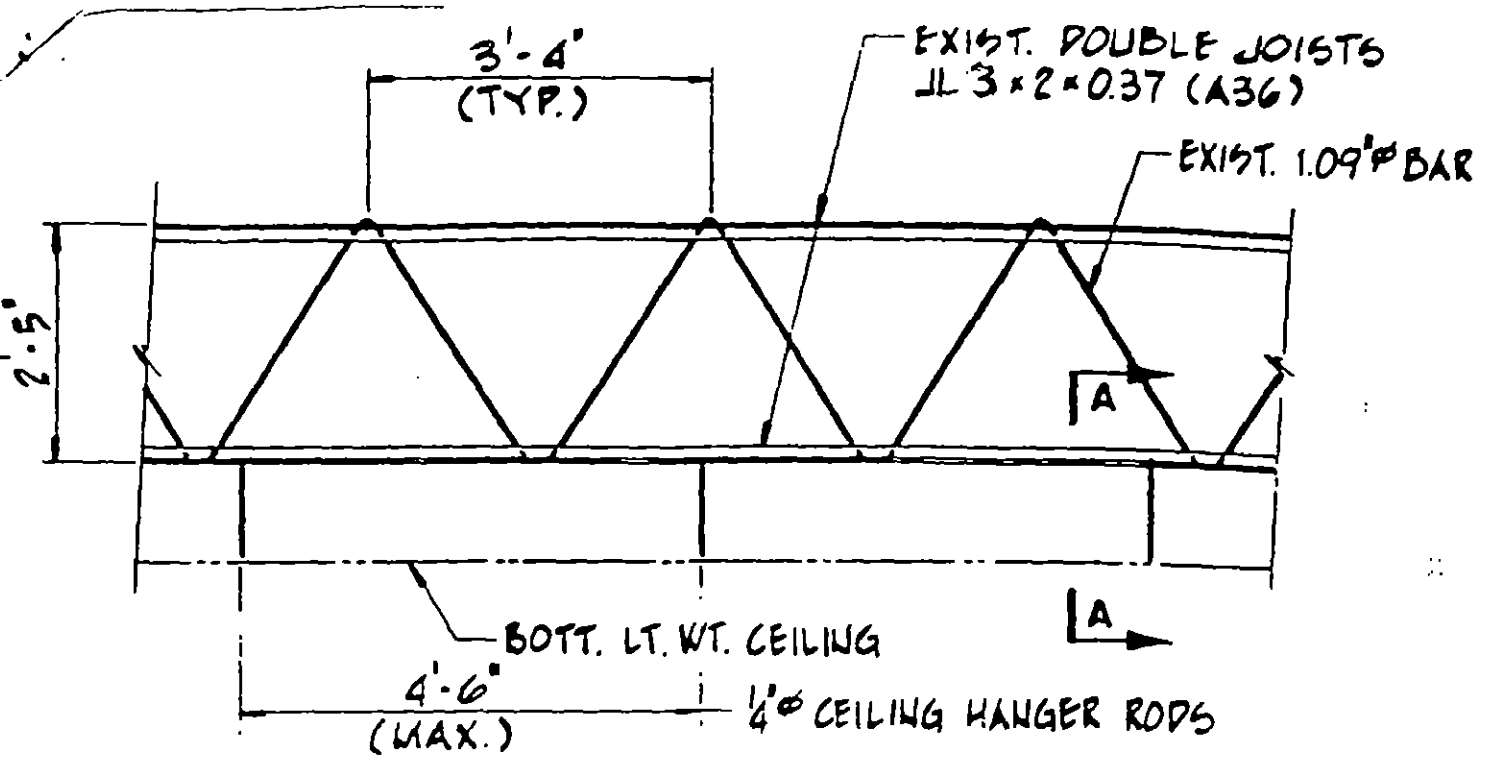


**PART ELEVATION**

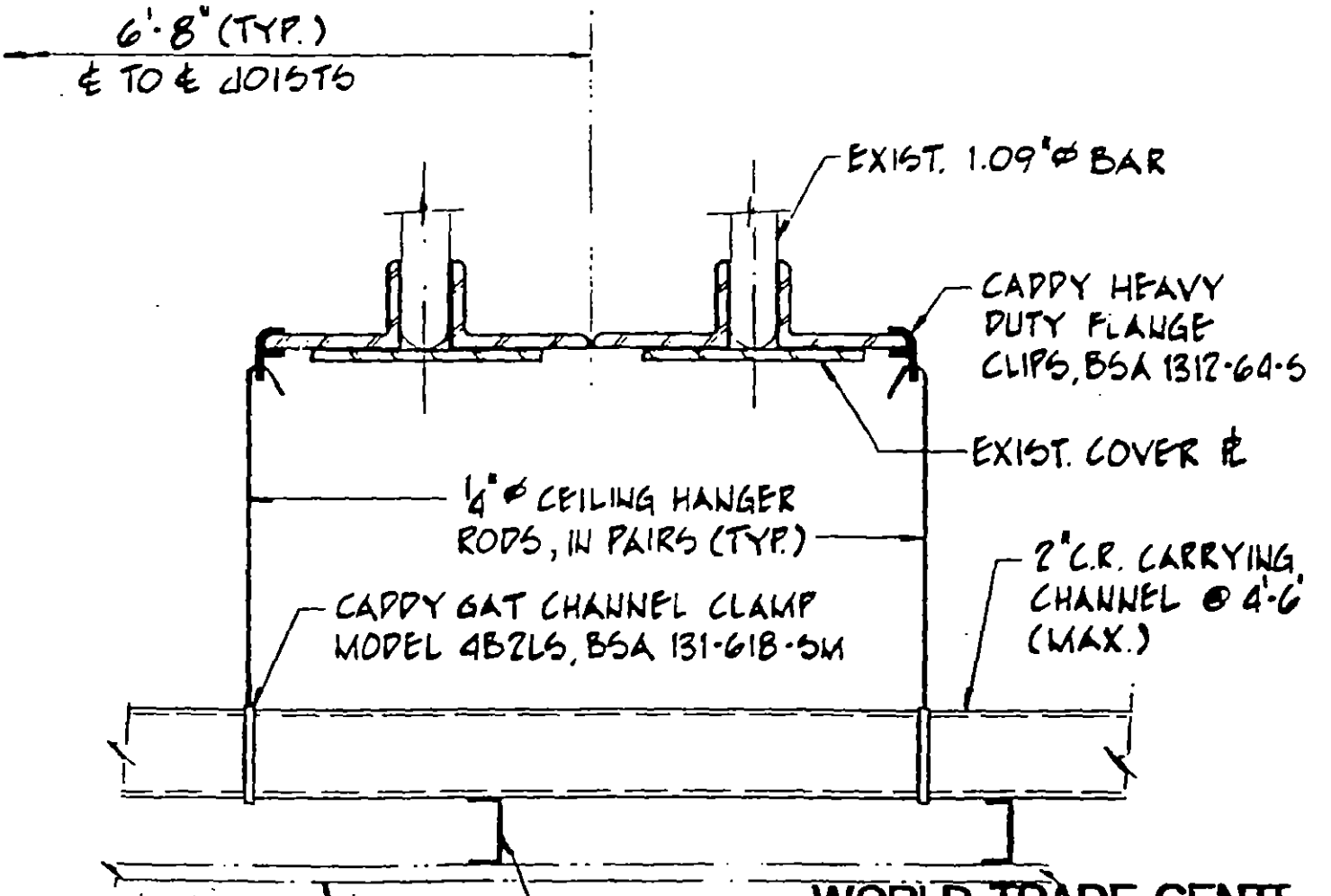


**SECTION A-A**

**CEILING SUPPORT DETAIL**
**FOR JOIST WITH COVER PLATE**

**WORLD TRADE CENTE**
**LIGHT WEIGHT CEILING**
**Standard Ceiling Connection t**
**Existing Floor Joists**
**SK-LWC**

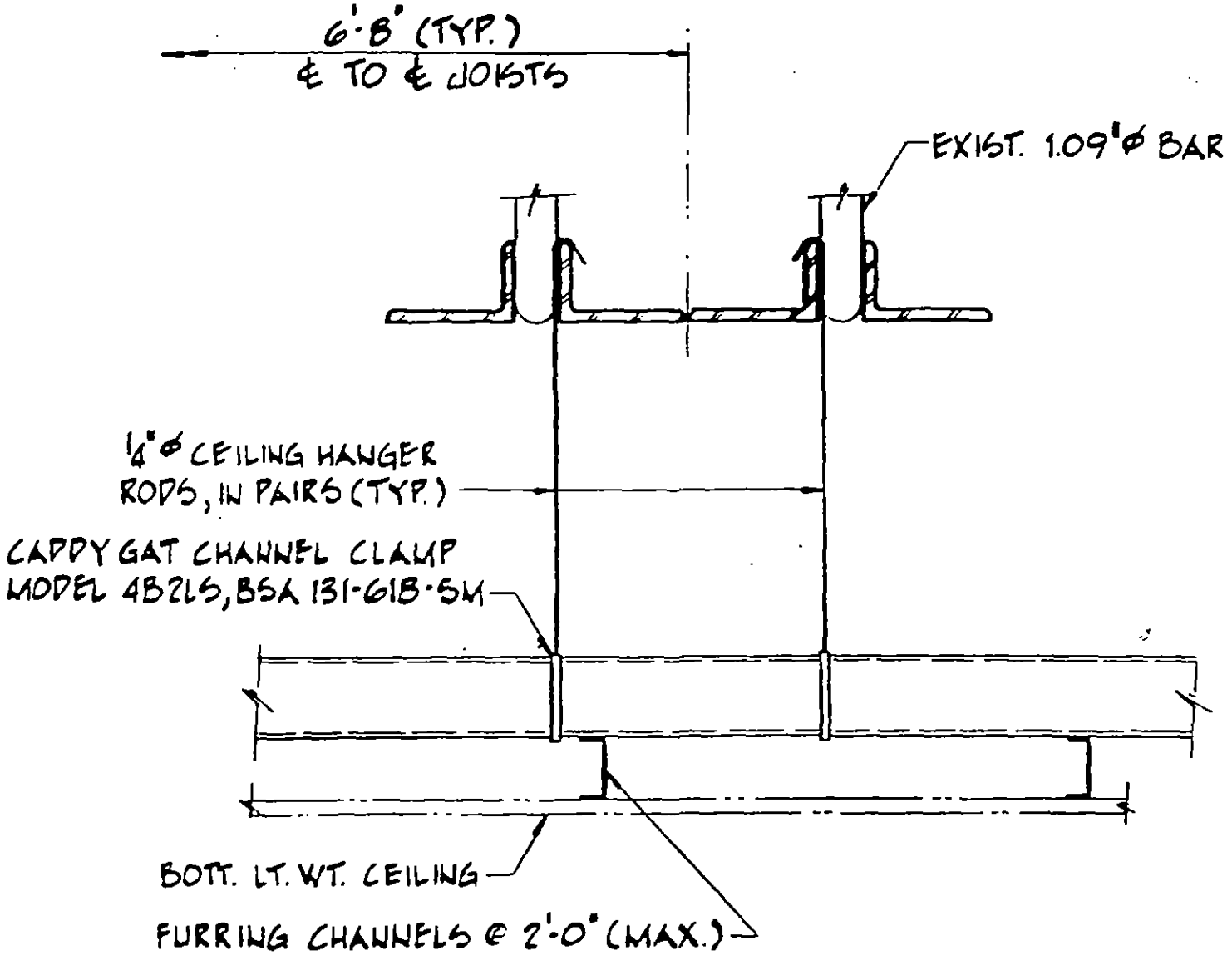


**CEILING SUPPORT DETAIL FOR JOIST WITHOUT COVER PLATE**

# WORLD TRADE CENTE

**LIGHT WEIGHT CEILING**

**Standard Ceiling Connection t**

**Existing Floor Joists**

**SK-LWC**

K-81453

PA 36
10-82

**THE PORT AUTHORITY OF NY & NJ**

To V. Doyletjan Room No.

From D. Bais Room No.

Date 1/15/86

SUBJ: THE WTC - STRUCTURAL DESIGN SPECIFICATION FOR ANTENNA MASTS ON NORTH AND SOUTH TOWER

cc: A. Cracchiolo, A. Niro, A. Stieglitz

Attached for your use and information is a copy of subject specifications received from Robertson, Fowler & Associates.

DB

Daljit S. Bais

att.

AKS:mjs

3/29/73 WX-8

(S)

# STRUCTURAL DESIGN SPECIFICATION
# ANTENNA MASTS
# ON THE
# NORTH & SOUTH TOWER OF THE WORLD TRADE CENTER

THE PORT AUTHORITY OF N.Y. & N.J.
DENAH CONSTRUCTION REVIEW UNIT
RECEIVED
JAN 16 1966
NOTED VAD
REFERRED TO SYC/VAS

## 1.0 ENVIRONMENTAL CONDITIONS

The antenna mast and its components shall be designed for the following conditions:

1.1 (a) a mean wind speed of one hundred and forty (140) miles per hour in any direction and no ice coating; or

(b) a mean wind speed of one hundred and ten (110) miles per hour in any direction with an ice coating of one half inch thickness over all exposed unheated metallic surfaces and under a minimum air temperature of 20°F; or

(c) a mean wind speed of one hundred and ten (110) miles per hour in any direction with no ice coating and under a range of air temperature from 10°F to 90°F; or

(d) a mean wind speed of forty (40) miles per hour in any direction with no ice coating and under a range of air temperature from -15°F to 105°F; and

1.2 the dynamic effects of wind associated with the mean wind speeds specified in Section 1.1. The dynamic effects of the wind gusts shall be included by multiplying the mean wind loads by the Response Factor. The Response Factor may be taken to be five in the absence of a dynamic analysis.

## 2.0 STRUCTURAL CONSTRAINTS

2.1 The fundamental period of free transverse vibration of the mast, including all antennas and associated equipment, shall be less than three (3) seconds.

2.2 The Contractor shall coordinate the design of the interface between the mast and the supports with the Engineer.

## 3.0 CORROSION RESISTANCE

The antenna mast shall be designed to be permanently protected against corrosion in the atmosphere above New York City by means of corrosion resistant materials and/or protective coating systems. Evidence shall be submitted concerning the durability of the proposed system and concerning the nature and the frequency of maintenance expected to be required to protect the mast permanently.

## 4.0 STRUCTURAL DESIGN

The antenna mast shall be designed, fabricated and erected in accordance with the requirements of the following specifications:

(1) Specification For The Design, Fabrication and Erection of Structural Steel For Buildings, American Institute of Steel Construction, 1969, with Supplements No. 1 and No. 2 (hereinafter referred to as the AISC Specification);

(2) Structural Welding Code AWS D1.1-72, American Welding Society. Quality of welds shall conform to the requirements of Section 9, Design of New Bridges, as verified by non-destructive testing includ visual, MT, PT and UT testing, singly or in conjunction with each other;

(3) Specification For Structural Joints Using ASTM A325 or A490 Bolts, Research Council on Riveted and Bolted Structural Joints of the Engineering Foundation, April 18, 1972.

Additions and exceptions to the specifications listed above are:

(a) structural steel shall be killed fine-grain practice;

(b) structural steel conforming to modified ASTM specifications may be used where approved by the Engineer;

(c) delete Section 1.5.6 of the AISC Specification in which allowable stresses may be increased one-third for wind loading; and

(d) bolting system shall be selected for the connections to avoid loosening of the nuts under oscillatory wind loads and to prevent slippage under the maximum design loads.

## 5.0 WIND LOADS

The design wind loads shall be the product of the Response Factor given in Section 1.2 and the mean wind forces (drag, lift and torque) on the mast and on all components of antennas and associated equipment at the mean wind speeds specified in Section 1.1. Wherever possible, the mean wind forces and moments shall be based on experimental data. In the absence of reliable data, the design wind drag (force component in the direction of wind) shall be calculated as follows:

$$F_d = r \cdot S \cdot Y \cdot C_d \cdot A \cdot Q$$

where $F_d$ = design wind drag (lbs.)

$r$ = response factor given in Section 1.2.

$S$ = shielding factor

$Y$ = yaw factor

$C_d$ = coefficient of drag

$A$ = solid area of a panel, solid area of one face of a lattice tower, length times diameter of a circular cylinder, or frontal circular area of a microwave dish, (square feet)

$Q$ = velocity pressure of wind = $0.0025V^2$ (lbs/sq.ft.)

and $V$ = mean wind speed (miles per hour).

Values of the parameters S, Y and $C_d$ for several parts of the antenna mast are given in the following sections.

## 5.1 Coefficients of Drag and Yaw Factors

### 5.1.1 Circular Cylinders, Rods & Wires

L = length (feet)

D = diameter (feet)

A = DL (square feet)

$\theta$ = angle between wind direction and longitudinal axis of cylinder

Y = $\sin^3 \theta$ for $L/D \geq 20$

TABLE 5.1 Drag Coefficients

| | $D\sqrt{Q}$ | | |
|---|---|---|---|
| | <2 | 2 to 10 | >10 |
| Very smooth wires, rods, pipes | 1.2 | 0.5 | 0.8 |
| Moderately smooth wires, pipes | 1.2 | 0.7 | 0.8 |
| Fine wire cables | 1.2 | 0.9 | 1.1 |
| Thick wire cables | 1.3 | 1.1 | 1.2 |

### 5.1.2 Square Cylinders

L = length of cylinder (feet)

B = width of each side of square (feet)

A = BL (square feet)

$\theta$ = angle between wind direction and longitudinal axis of cylinder

Y = $0.5 (\sin \theta) (1 + \sin \theta)$ for $L/B \geq 20$

TABLE 5.2

| L/B | Coefficient of Drag $C_d$ | |
|---|---|---|
| | WIND → ▨ | WIND → ⇔ |
| 1 | 1.12 | 1.30 |
| 2 | 1.19 | 1.30 |
| 6 | 1.20 | 1.32 |
| 10 | 1.30 | 1.36 |
| 20 | 1.50 | 1.54 |
| 40 | 1.70 | 1.80 |
| 50 | 1.80 | 1.87 |
| 100 | 1.90 | 2.02 |
| ∞ | 2.00 | 2.20 |

5.1.3 Rectangular Flat Plate

L = length of plate (feet)

B = width of plate (feet)

A = BL (square feet)

$\theta$ = angle between wind direction and a line normal to the plate

Y = cos $\theta$

TABLE 5.4

| L/B | 1 | 2 | 6 | 10 | 20 | 40 | 50 | 100 |
|---|---|---|---|---|---|---|---|---|
| $C_d$ | 1.15 | 1.19 | 1.20 | 1.30 | 1.50 | 1.70 | 1.80 | 1.90 |

5.1.4 Plane Truss, Plane Frame and Ladders

A = solid area in elevation (square feet)

Ae = total enclosed area in elevation

= length x overall width (square feet)

R = solidity ratio = A/Ae

$\theta$ = angle between wind direction and a line normal to the plane of truss or frame

Y = cos $\theta$ for $0° \leq \theta \leq 30°$

TABLE 5.4

| SOLIDITY RATIO R | Drag Coefficient $C_d$ | |
|---|---|---|
| | Structural Members | Round Members |
| 0 | 2.0 | 1.2 |
| 0.10 | 1.9 | 1.2 |
| 0.15 | 1.8 | 1.1 |
| 0.2 | 1.7 | 1.0 |
| 0.3 to 0.9 | 1.6 | 1.0 |
| 0.95 | 1.7 | 1.5 |
| 1.0 | 2.0 | 2.0 |

5.1.5 Triangular Lattice Tower

A = solid area in elevation of one face of tower (sq. ft.)

Ae = total enclosed area in elevation of one face of tower (sq. f

R = solidity ratio of one face of tower = A/Ae

$C_d$ = coefficient of drag of lattice tower

Y = 1.0 for all wind directions

For members of structural sections and $0.1 \leq R \leq 0.4$,

$$C_d = 3.65 - 4.65\ R$$

For members of round sections and $0.1 \leq R \leq 0.4$,

$$C_d = 2.43 - 3.10\ R$$

For towers with both structural and round members, interpolate $C_d$ according to the proportion of each type of members

5.1.6 Square Lattice Tower

A = solid area in elevation of one face of tower (sq. ft.)

Ae = total enclosed area in elevation of one face of tower (sq. ft.)

R = solidity ratio of one face of tower = A/Ae

$C_d$ = coefficient of drag of lattice tower

Y = 1.0 + 0.7 R for wind at 45 degrees to a face of tower ($0.1 \leq R \leq 0.5$)

For members of structural sections and $0.1 \leq R \leq 0.4$,

$$C_d = 4.0 - 5\ R$$

For members of round sections and $0.1 \leq R \leq 0.4$,

$C_d = 2.66 - 3.33\ R$

For tower with both structural and round members,

interpolate $C_d$ according to the proportion of the solid area of each type of members

5.1.7 Microwave Dishes

D = diameter of the dish (feet)

A = $0.7854\ D^2$ (sq. ft.)

$\theta$ = angle between the wind direction and the direction in which the dish is pointing (degrees)

$C_d$ = 1.0

| $\theta$ | 0 | 90 | 120 | 180 |
|---|---|---|---|---|
| Y | 1.0 | 0.1 | 2.1 | 1.5 |

5.2 Shielding Factors

5.2.1 Transmission Lines and Ladders Inside the Mast

$S = 1.4\ (1-R)^2$ for $R > 0.15$

$S = 1.0$ for $R \leq 0.15$

where $R = (A_1 + A_2)\ /A_3$

$A_1$ = solid area in elevation of a mast face, exclusive of the solid area of the mast legs (square feet);

$A_2$ = solid area in elevation of the portion of lattice panels mounted on the mast faces, which are inside the mast legs in elevation (square feet); and

$A_3$ = area of a mast face enclosed within the mast legs in elevation (square feet)

When a transmission line is completely shielded from wind by another line and when the clear distance between the lines is equal to or less than the diameter of the shielding line, the shielding factor of the shielded tube shall be:

$S = 0.7 (1 - R)^2$ for $R > 0.15$

$S = 0.5$ for $R \leq 0.15$

5.2.2 Lattice Panels On The Mast Faces

(a) Panel mounted on the leeward face of the mast and having width equal to 90% to 110% of face width of the mast.

$S = 1.5 (1 - R_1)^2 (1 - R_2)^2$ but not more than 1.0

where $R_1 = (A_1 + A_2) / A_3$

$R_2 = A_1 / A_3$

$A_1$ = solid area of mast face (square feet);

$A_2$ = solid area of the lattice panel on the windward face of the mast (square feet); and

$A_3$ = area of a mast face or area of the panel, whichever is the greater (square feet)

(b) Panel mounted on the leeward face of the mast and having width less than 90% of face width of the mast.

$S = 1.5 (1 - R_1)^2 (1 - R_2)^2$ but not more than 1.0

where $R_1 = (A_1 + A_2) / A_3$

$R_2 = (A_1 - A_4) / A_3$

$A_1$ = solid area of mast face (square feet);

$A_2$ = solid area of the lattice panel on the windward face of the mast (square feet);

$A_3$ = area of a mast face (square feet); and

$A_l$ = solid area of the legs in elevation of a face of the mast (square feet)

(c) Panel mounted on the windward face of the mast

S = 1.0

5.2.3. Mast Shielded by Lattice Panels

(a) Panel width equal to or greater than the mast face width

$S = 1.4 (1 - R)^2$ but not more than 1.0

where R = solidity ratio of the lattice panel covering the mast

(b) Panel width less than the mast face width

S = 1.0

(5)

To: A. Cracchio Co 6.27.85

From: Varanj

Subject: Engineering involvement in reviewing Cranes at Ports

1) The requirements of Tenant Review have been confined to

a) Show the maximum load capacity

b) " " design wind forces

c) Show the wheel loads, separating the dead, live and wind loads, including impact, for loading conditions creating creating maximum reactions.

2) Regarding the crane itself, design responsibility is left to the manufacturer in every respect, i.e, structural, mechanical and electrical.

Varanj

copy. S. Chin, W. McDonnell, A. Rolsslet

COLLECTIBLES

The inordinate number of fragmental submissions in this project has caused delays in our handling and review of the material. It is requested that submissions be coordinated to be more comprehensive, integrated, under appropriate Alteration Application number, and covered by a Review Request form from the facility describing the subjects and materials submitted, in order to enable us to work within schedule.

Manual D

TCRU

Technical Standards, over and beyond the mandatory Building Codes of Municipalities, adopted by TCRU in reviewing Tenant Construction design.

These standards have been adopted to comply with PAT 1V-V.06, Section IV A (a (Policy Regarding Codes & Stand

"The Engineering Dept. is also responsible for determining the standard ... when there is no applicable Code".

Architectural

NFPA (National Fire prevention Code)
- 75 Computer rooms
- 409 Aircraft hangars
- 416 Terminal Buildings
- 417 Loading bridges

Structural

AASHTO — Light poles

State of New Jersey.

Basic roof live load 30 psf
" wind " 20 psf

CIVIL

- PA Standard Dwgs. & Design Standard Shee

Electrical

- NEC (National Electric Code) in additional to any local El. Cod
- PVC prohibited (except in non-occupied buildings, eg Ports Dept. warehouses).
- BX prohibited.
- NFPA 20, Centrifugal fire Pumps

MECHANICAL

- ASME Safety Code for Automatically Fired Combustion Equipment.
- NJ adopted but not NYC → NFPA-30 Flammable & Combustible Liquids,
- ANSI B 30.13 Controlled mechanical Storage C
- ANSI B56.1 Low Lift & High Lift Trucks

## FIRE PROTECTION

- NFPA 11 – Foam Extinguishing Systems
- " 11A – High Ex. Foam Syst. "
- " 12 – Carbon dioxide " "
- " 12A,B – Halon " "
- " 14 – Standpipes
- " 17 Dry Chemical " "
- " 71, 72 Signalling Systems & Fire detect.
- " 409 Hangars

## Aviation Rampside Fire protection

- NFPA 407 Aircraft Fuel Servicing
- " 415 " Fueling Ramp drainage
- " 416 Airport Terminal Bldgs
- TCRU Standard for protection of Terminal Buildings from rampside potential points of fuel spillage.

Memorandum

THE PORT AUTHORITY OF NY & NJ

To. V. Dovletian, Supervisor Tenant Construction Review Unit
From Ray W. Ross
Date December 6, 1984
Subject TENANT CONSTRUCTION REVIEW MANUAL

Reference

Copy To D. Goldberg, F. Grimaldi, D. Hahn, L. Halley, N. Lesser, R. Loureiro, D. Montalbano, S. Wander, J. Wilson, P. Wood

| Route To | Date | Noted By | Date |
|---|---|---|---|
| | | | |
| | | | |
| | | | |
| | | | |
| Return To | | Fire | |

Based on our recent discussion regarding use/misuse by others of the subject manual, and the need for strengthening its application, the following list of National Fire Protection Association fire codes shall be used in conjunction with Section 12, Fire Protection.

The listed national consensus standards are representative of safety practices that, out of necessity in our work experience and perception, shall supplement municipal and state codes that are normally referred to--whether referenced therein, or not. In practice, our department has commonly and frequently used these standards.

| Standard Reference Number | Title (Short) |
|---|---|
| 10 | Portable Fire Extinguishers |
| 11 | Foam Extinguishing Systems |
| 11A | Medium and High Expansion Foam |
| 12 | Carbon Dioxide Extinguishing Systems |
| 12A | Halon 1301 Fire Extinguishing Systems |
| 12B | Halon 1211 Fire Extinguishing Systems |
| 13 | Installation of Sprinkler Systems |
| 14 | Standpipe and Hose Systems |
| 15 | Water Spray Fixed Systems |
| 16 | Foam-Water Sprinkler and Spray Systems |
| 16A | Closed-Head Foam-Water Sprinkler Systems |
| 17 | Dry Chemical Extinguishing Systems |
| 20 | Centrifugal Fire Pumps |
| 22 | Water Tanks for Private Fire Protection |
| 24 | Private Fire Service Mains |
| 30 | Flammable and Combustible Liquids Code |
| 31 | Installation of Oil Burning Equipment |
| 37 | Stationary Combustion Engines and Gas Turbines |
| 54 | National Fuel Gas Code |
| 58 | Storage and Handling of LPG |
| 70 | National Electrical Code |
| 71 | Central Station Signaling Systems |
| 72A | Local Protective Signaling Systems |
| 72B | Auxiliary Protective Signaling Systems |
| 72C | Remote Station Protective Signaling Systems |
| 72D | Proprietary Protective Signaling Systems |

(72)

PA 90A

| Standard Reference Number | Title (Short) |
|---|---|
| 72E | Automatic Fire Detectors |
| 75 | Electronic Computer/Data Processing Equipment |
| 80 | Fire Doors and Windows |
| 85A | Fuel Oil and Natural Gas-Fired Single Burner Boiler-Furnaces |
| 85B | Natural Gas-Fired Multiple Burner Boiler-Furnaces |
| 85D | Fuel-Oil Fired Multiple Burner Boiler-Furnaces |
| 87 | Piers and Wharves |
| 88A | Parking Structures |
| 88B | Repair Garages |
| 90A | Air Conditioning and Ventilating Systems |
| 90B | Warm Air and Air Conditioning Systems |
| 91 | Blower, Exhaust Systems for Dust, Stock, Vapor Removal |
| 96 | Vapor Removal from Commercial Cooking Equipment |
| 101 | Life Safety Code |
| 110-T | Emergency and Standby Power Systems |
| 130 | Fixed Guideway Transit Systems |
| 204M | Smoke and Heat Venting |
| 211 | Chimneys, Fireplaces, Vents |
| 214 | Water Cooling Towers |
| 231 | Indoor General Storage |
| 231A | Outdoor General Storage |
| 231C | Rack Storage of Materials |
| 231D | Storage of Rubber Tires |
| 231F | Storage of Roll Paper |
| 329 | Underground Leakage of Flammable and Combustible Liquids |
| 407 | Aircraft Fuel Servicing |
| 409 | Aircraft Hangars |
| 415 | Aircraft Fueling Ramp Drainage |
| 416 | Airport Terminal Buildings |
| 417 | Aircraft Loading Walkways |
| 418 | Roof-top Heliport Construction and Protection |
| 419 | Airport Water Supply Systems for Fire Protection |
| 502 | Limited Access Highways, Tunnels, Bridges, Elevated Roadways and Air Right Structures |
| 513 | Motor Freight Terminals |

Inasmuch as the present manual is to be revised and/or updated, and this will not be done soon, I suggest that the foregoing list of standards be brought to the attention of our personnel for timely application on pertinent projects.

Ray

Ray W. Koss
*Fire Protection Engineer*

(EP 1)

BUCKSLIP

RECEIVED
APR 0 1 1988
PORT AUTH. N.Y. & N.J.
WORLD TRADE ENGINEERING DEV.
DEP. DIR. PHYS. FAC.

To: R. Linn
From: V. Dovletian
Date: March 30, 1988
Subject: SPRINKLERS IN MECHANICAL EQUIPMENT ROOMS

Reference: Buckslip, R. Linn to V. Dovletian, dated 3/7/88

Copy to: P. Cooper, A. Coras, V.G. Pyrpyris, TCRU Staff

Regarding sprinkler installation in mechanical or electrical equipment rooms, the following Code Sections shall be used as guidelines:

1. The N.Y.C. Electrical Code, Section B30-246.0, Transformer Vaults, prohibits the installation of water pipes and sprinkler heads in high tension (over 600 volts) transformer vaults. However,

2. The National Electrical Code Sections 450-42 and 47 permit sprinklers as a method of protecting transformers, and

3. NFPA 13, 1983 (adopted as N.Y.C. Building Code RS 17-2) Section 4-4.14 states that when sprinkler protection is provided in generator or transformer rooms, hoods or shields installed to protect important electrical equipment from water shall be noncombustible.

Also

4. The N.Y.C. Electrical Code Section B30-43.0-m.1 prohibits any piping or duct system other than electrical to be within five (5) feet of any part of a service switchboard, but

5 The National Electrical Code Section 384-4 permits sprinklers in switchboard areas.

Please note that

6. Where sprinklers are not permitted, and the building is required to be provided with a fire suppression system, alternate means of suppression must be provided, also

7. In the event that a room containing the electrical equipment is also utilized for other purposes, such as storage of combustible materials, the requirements for fire protection of these other uses shall also be met.

Varouj

Varouj Dovletian

VAD/dm

(M1)

# GUIDELINES FOR REVIEW OF MECHANICAL EQUIPMENT HANGERS

When reviewing hanger details for ducts or mechanical equipment use the following guidelines to decide whether to refer the review to a structural engineer.

1. Expansion bolts in concrete slab, with or without steel deck, are acceptable without referring to a structural engineer.

2. Size and embedment of expansion bolts must be specified on the drawing. Mechanical engineer should write the comment, if needed. Use the attached table of loads to ensure that the specified bolt size is adequate, with a safety factor of 5.0.

3. If average load on equipment hangers is not more than 250#, accept without referring to structural engineer.

4. Support beams or angles attached to floor beams are acceptable without referring to a structural engineer.

5. Duct hangers shall be reviewed by the mechanical engineer.

SUBJ: ANCHORS DRILLED IN CONCRETE

10/76

HARD ROCK CONCRETE

| D | MIN. EMBED-MENT | SHEAR (SA) | | | TENSION (TA) | | | TORQUE Ft-Lbs. |
|---|---|---|---|---|---|---|---|---|
| | | 2000 | 3000 | 4000 | 2000 | 3000 | 4000 | |
| 1/4 | 1-1/8" | 1190 | 1190 | 1190 | 1050 | 1360 | 1650 | 10 Max |
| 3/8 | 1-3/4 | 3380 | 3380 | 3380 | 1765 | 2240 | 2760 | 25-35 |
| 1/2 | 2-1/4 | 7350 | 7350 | 7350 | 2980 | 3780 | 4610 | 45-65 |
| 5/8 | 2-3/4 | 11600 | 13500 | 13500 | 5040 | 6360 | 7760 | 80-90 |
| 3/4 | 3-3/8 | 16400 | 19250 | 21750 | 8530 | 10700 | 12900 | 125-175 |
| 1 | 4-1/2 | 29500 | 34200 | 39300 | 15200 | 19000 | 23000 | 250-300 |
| 1-1/4 | 5-1/2 | 47600 | 55000 | 63500 | 23000 | 29000 | 35000 | 400-500 |

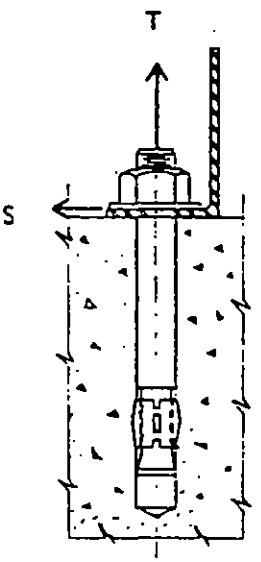

# WORKING LOADS

## KWIK-BOLT ALLOWABLE SHEAR AND TENSION VALUES IN POUNDS[1,2]

| ANCHOR DIAMETER (Inches) | MINIMUM DEPTH OF EMBEDMENT (Inches) | $f'_c$ = 2000 psi | | | $f'_c$ = 4000 psi | | | $f'_c$ = 6000 psi | | |
|---|---|---|---|---|---|---|---|---|---|---|
| | | Tension | | Shear | Tension | | Shear | Tension | | Shear |
| | | With Sp. Insp.[3] | Without Sp. Insp.[4] | | With Sp. Insp.[3] | Without Sp. Insp.[4] | | With Sp. Insp.[3] | Without Sp. Insp.[4] | |
| ¼ | 1⅛ | 225 | 115 | 380 | 360 | 180 | 650 | 435 | 220 | 650 |
| ¼ | 1½ | 430 | 215 | 380 | 555 | 280 | 650 | 725 | 365 | 650 |
| ¼ | 2 | 580 | 290 | 380 | 780 | 390 | 650 | 835 | 420 | 650 |
| ¼ | 2½ | 645 | 325 | 380 | 835 | 420 | 650 | 835 | 420 | 650 |
| ⅜ | 1⅜ | 515 | 260 | 860 | 590 | 295 | 1270 | 695 | 350 | 1550 |
| ⅜ | 2½ | 705 | 355 | 860 | 970 | 485 | 1270 | 1110 | 555 | 1550 |
| ⅜ | 3½ | 785 | 395 | 870 | 1150 | 575 | 1350 | 1310 | 655 | 1550 |
| ⅜ | 4½ | 820 | 415 | 870 | 1200 | 600 | 1350 | 1340 | 670 | 1550 |
| ½ | 2¼ | 1050 | 525 | 1710 | 1350 | 690 | 2050 | 1690 | 845 | 2320 |
| ½ | 2¾ | 1330 | 665 | 1710 | 1800 | 900 | 2060 | 2420 | 1210 | 2320 |
| ½ | 4½ | 1670 | 835 | 1710 | 2790 | 1400 | 2560 | 3590 | 1800 | 2960 |
| ½ | 6 | 2070 | 1040 | 1710 | 3070 | 1540 | 2560 | 3750 | 1880 | 2960 |
| ⅝ | 2¾ | 1240 | 620 | 2570 | 1650 | 825 | 2590 | 1910 | 955 | 3350 |
| ⅝ | 3½ | 1440 | 720 | 2570 | 2270 | 1140 | 2590 | 2390 | 1200 | 3350 |
| ⅝ | 5½ | 1740 | 870 | 3070 | 3550 | 1750 | 3850 | 4990 | 2500 | 3960 |
| ⅝ | 7½ | 2070 | 1040 | 3070 | 4220 | 2110 | 3850 | 5200 | 2500 | 3560 |
| ¾ | 3¼ | 1870 | 935 | 3050 | 2550 | 1270 | 4270 | 2710 | 1360 | 4510 |
| ¾ | 5 | 2690 | 1350 | 3050 | 4110 | 2060 | 4270 | 4390 | 2200 | 4510 |
| ¾ | 7 | 3630 | 1820 | 3490 | 5230 | 2620 | 4610 | 5570 | 2940 | 5220 |
| ¾ | 9 | 3680 | 1840 | 3490 | 5550 | 2930 | 4610 | 5500 | 2950 | 5220 |
| 1 | 4½ | 3220 | 1610 | 6250 | 4000 | 2000 | 6720 | 5060 | 2530 | 7960 |
| 1 | 6 | 4040 | 2020 | 6250 | 6140 | 3070 | 6720 | 7950 | 3950 | 7960 |
| 1 | 8 | 4180 | 2090 | 6250 | 6840 | 3420 | 7640 | 8650 | 4330 | 9070 |
| 1 | 10 | 4160 | 2090 | 6250 | 6840 | 3420 | 7640 | 8650 | 4330 | 9070 |
| 1¼ | 5½ | 4360 | 2180 | 8440 | 4360 | 2570 | 8920 | 6160 | 3550 | 11200 |
| 1¼ | 6½ | 4530 | 2480 | 8440 | 4530 | 3380 | 8920 | 7160 | 4500 | 11200 |
| 1¼ | 8½ | 4560 | 2880 | 8440 | 4890 | 4310 | 8920 | 9100 | 5480 | 11200 |
| 1¼ | 10½ | 4630 | 3075 | 8440 | 5570 | 5090 | 8920 | 11100 | 5550 | 11200 |

[1]The tabulated shear and tensile values are for anchors installed in stone aggregate concrete having the designated ultimate compressive strength at the time of installation.

[2]The tabulated values are for anchors installed a minimum of twelve diameters on center and a minimum edge distance of six diameters for 100 percent anchor efficiency. Spacing and edge distance may be reduced to six diameters spacing and three-diameter edge distance provided the values are reduced 50 percent. *Linear interpolation may be used for intermediate spacings and edge margins.*

[3]These tension values are only applicable when the anchors are installed with special inspection as set forth in Section 303(b) of the Code.

[4]These tension values are applicable when the anchors are installed without special inspection as set forth in Section 303(b) of the Code.

THE PORT OF NEW YORK AUTHORITY

# Memorandum

'85 JAN 28 AM 7:17

| Transfer To | Date | Noted By | Ca |
|---|---|---|---|
| | | | |
| | | | |
| | | | |
| | | | |
| Return To | | File | |

To: Mr. E. J. Boland, Supervising Engineer
From: James D. Agura
Date: January 23, 1985
Subject: THE WORLD TRADE CENTER - Touche Ross, Inc. - 86th Floor, WTC
Tenant Alteration Application No. 3057 - Approval of Ceiling Suspension System Components

Reference: Buckslip - E. Boland/J. Agura, dated January 21, 1985 (with NICO submission of BSA Resolutions)

Copy To: Messrs. P. Balduzzi, J. Carlock, D. Censullo, V. Dovletian (w/att), L. Feld, R. Lachman, R. Linn, E. McNierney, J. Rand (w/att)

In response to the referenced buckslip, the submitted ceiling suspension components - Beam Clamp (BSA #1312-64-SM), Clamp for 2" Channel (BSA #131 68-SM) and Power Actuated Fastener (BSA #48-69-SA) were reviewed with V. Dovletian of Engineering's TCRU on January 23rd.

The submitted samples and printed back-up material was approved for subject Application's ceiling support installation based on a 4'-6" maximum spacing of the ½" hanger rods in accordance with Reference Standard 5-16 of the NYC Building Code. Mr. Dovletian requested the retention of all samples and back-up information for his files.

Please request the Contractor to transmit two (2) additional sets of these samples and information to this office.

James D. Agura
Project Administrator
World Trade Center Planning

EMcN/gem

WTC

**THE PORT AUTHORITY OF NY & NJ** Memorandum

To Robert J. Linn, Dep. Director for Physical Facilities, WTD
From F. DiPaolo
Date. November 18, 1981
Subject WTC - CRITERIA FOR DEMISING WALLS AS AN INTERIM MEASURE BETWEEN L.L. #5 COMPARTMENTATION AND FULL SPRINKLER INSTALLATION AT THE WORLD TRADE CENTER
Reference

| Refer To | Date | Noted By | Date |
|---|---|---|---|
| | | | |
| | | | |
| | | | |
| | | | |
| Return To | | File | |

Copy To All WTC Planning Staff, Bais, Boland, Censullo, Coras, Feld, Gallagher, Hofmann, Madigan, Sarnelli, Rand, Schwartzman, Kozma, Montalbano, Boyce, Muessig

A meeting held on October 21, 1981 to discuss specific questions of clarification on the subject matter was attended by the following personnel:

WTC Planning - Agura, Carlock, DiPaolo, Spaulding, Westrick, Wunschel

WTC Construction - Boland, Feld, Schleif

Risk Management - Hofmann

WTC Engineering - Bais, Schwartzman

WTC Operations - Sarnelli

Structural Integrity - Gallagher, Madigan

Your approval signature at the end of the Memorandum will reconfirm these standards and authorize action described in Item #5.

1. One-hour Rated Partitions - shall be constructed in accordance with N.Y.C. Code. Fire dampers are required on all transfer air ducts, but not on sheet metal supply air ducts.

2. 16" or 24" Centered Partition Studs - 24" o.c. meets N.Y.C. Code for one-hour partitions and is acceptable if Engineering approves T.C.A./T.A.A. drawings submitted by outside consultants. However, WTC in-house standard will remain 16" o.c.

3. Two-hour Rated Partitions - shall be constructed in accordance with N.Y.C. Code utilizing two (2) layers of 1/2" "fire code" gypsum board with staggered taped and spackled joints on each side of studs spaced 16" o.c. Fire dampers are required on all supply and return air ducts and all voids will be packed with thermafiber.

4. Upgrading of Demising Partition - The following rule applies only to tenant spaces being sprinklered under a TAA/TCA. Construct or upgrade partition to one-hour rating. This will stop migration of hot air from fire in adjacent non-sprinklered area which might otherwise fuse sprinklers and cause water damage.

5. Upgrading KW500 Partitions - Engineering will develop details for upgrading an existing KW500 & 700 Partition for use as a one-hour rated demising partition, for review by WTC Planning, Tenant Construction Review Unit, and Risk Management. We suggest 5/8" gypsum added per side and extension above ceiling. Until details are developed and accepted, KW500 & 700 partitions will not be utilized as demising walls.

6. Double Doors for Public Corridors - Doors installed under Contract 749.00 shall remain in place even though not code required in a fully sprinklered building.

Engineering shall charge their services to No. W2-701.388. for Item #5.

F. DiPaolo, Manager
World Trade Center Planning

CONCURRED:

Deputy Director for Physical Facilities, WTD

FD/JDA:ar

E 2.

PA 36
10-74

**THE PORT AUTHORITY** of NY & NJ

To V. Doubleday Room No.

From **Daniel L. Goldberg**/Room 58E/Ext. 7223

Date / /

BX should not be acceptable. My comments

DLG

(E2a)

RIDER

ALTERATION APPLICATION #W-01437

ELECTRICAL

1. Referring to Syska & Hennessy minutes of the October 1, 1984 meeting held in Tenant Construction Review Unit's offices at One World Trade Center:

   a.) Cables with PVC insulation and/or jacket are not acceptable, even when used in armored cables (type AC commonly called BX).

   b.) The above requirement has been reiterated to the tenant's representative since the submission on 7/5/84 of the "Basic Design Schematic for 7 World Trade Center", and it covers all cables to be used in this project: 15KV, 600V power and branch circuiting, and communication.

PLUMBING

2. Fire standpipe hose shall be approved 100% synthetic single jacket fire hose. (Repeat comment).

3. Clamps for no-hub piping shall be those manufactured by Clamp-All Corporation. (Repeat comment).

4. No-hub cast iron pipe may be used for 4" and less and on branch piping behind toilet rooms only. (Repeat comment).

FIRE PROTECTION

5. As per meeting of October 1, 1984 with Syska and Hennessy, all fire protection comments of memo, Dovletian to Linn, dated 8/6/84, are deferred pending submission of a complete set of contract documents.

The following comments relate to submitted "Fire Protection Water Supply Description" by Syska and Hennessy, dated October 2, 1984:

6. The following objective must be addressed: "The combined sprinkler and fire standpipe system must have water sources, and means to deliver, beyond reproach. The high zone in particular must have reliability and sufficient redundancy to assure that water will be available in adequate quantity and at the required pressure at all times, notwithstanding minimum Code requirements."

7. As indicated in the "Description" Item 3.b., and focused on in our Comment #28 of a previous rider, the high zone system must be designed to have at least one of the domestic tank fill pumps served by emergency power for vital building services.

(cont'd)

PA 36
9 75

THE PORT AUTHORITY OF NY & NJ

To Mr. D. Goldberg Room No 72S

**Varoujan Dovletian** / Room 43E / Ext. 4203

Date 11 / 29 /84

Re your buckslip received on 11/27/84 advising us that "BX should not be acceptable" in the Keystone Building I would appreciate your guidance in establishing the conditions under which BX shall or shall not be acceptable as a wiring method.

Please advise me if in the case of Keystone your decision is a recommendation or a requirement.

Varoujan Dovletian, P.E.
Supervising Engineer
Tenant Construction Review Unit

cc: D. Hahn, F. Schink

Demolition and construction of work in areas containing asbestos shall comply with the Code of Federal Regulations - Title 29, Section 1910.1001 etc. The following are the salient points of the Regulations to be established on the drawings and observed during construction.

a. Location of isolation barriers.

b. Installation and construction details of the barriers.

c. Segregation of the work area from the ventilation system of the rest of the building.

d. A local ventilation system servicing the work area.

e. The density of the contaminants shall be monitored by a qualified person in accordance with Title 29.

f. Construction shall not be performed in occupied spaces.

g. Egress shall not be obstructed by the above work.

## SCHEDULE "E"

All work in connection with ceiling tile removal and replacement and all other work conducted within any ceiling plenum space (other than that related to removal and stripping of asbestos which shall be governed by other standards) shall be subject to the following rules and regulations:

1) Prior to commencing work, the Contractor shall arrange with an independent commercial laboratory, which shall be approved by the Port Authority, to provide qualified air monitoring technician(s) with approved equipment to measure, while such work is in progress, the airborne concentration of asbestos fibers using an 8-hour, time-waited average (TWA) and the membrane filter method with phase contrast optical microscopy (NIOSH Method), all in accordance with applicable regulations of the Occupation Safety and Health Administration (OSHA), U.S. Department of Labor, contained in Title 29, Code of Federal Regulations, Part 1910

   Sufficient test shall be taken during each work shift to establish a cross-section of the fiber concentration at each area of work activity at the most critical elevation during all phases of construction commencing at the beginning of ceiling removal and concluding with final clean up after replacement of ceiling.

   At the end of each work shift, the technician in charge shall arrange for the exposed filters to be properly packaged, sealed and delivered, without being subjected to excess motion, to the approved laboratory. The laboratory will examine the filters and report at the beginning of the next shift, by telephone, to the Port Authority inspector as to whether or not a limit of one (1) fiber per centimeter cubed has been exceeded. A written report, signed by the responsible laboratory official, shall be returned within 24 hours of the telephone report to the Port Authority inspector who will retain the copy for Port Authority files.

2) Work in these areas shall only be performed when the premises are not occupied except for authorized Contract and Port Authority personnel. The areas shall be isolated from other occupied areas. Work in public areas will be performed during other than normal working hours and access by the public will be prevented by appropriate barricades. Before starting work in tenant areas, the Contractor shall create a vestibule at each entrance by hanging polyethylene sheets from the ceiling with 18" overlaps to form a dust proof barrier.

3) All other requirements of OSHA and the EPA, as well as other authorities having jurisdiction, shall be complied with as if the Port Authority were a private corporation.

In compliance with Schedule "E" contractors performing work in hung ceiling areas are required to arrange air-monitoring with a qualified laboratory. Such a laboratory must be approved by the Port Authority.

As of this date, the Risk Management Division has approved the following three air-monitoring laboratories:

✓ Environmental Health Protection Consultants, Inc.
510 North Kings Highway
Cherry Hill, New Jersey 08034
Tel: (609) 779-1372 Att. Mr. Joseph Wilson

✓ Environmental Technology Inc.
P.O.B. #127
W. Hartfold, Connecticut 06107
Tel: (203) 521-6820 Att. Dr. Robert Sawyer

✓ Environmental Abatement
186 Third Street
Brooklyn, New York 11215
Tel: (212) 522-2263 Att. Mr. R. Katz

As additional laboratories are approved this memo will be amended. An additional memo will be released listing approved asbestos "clean-up" contractors.